FACET

MARINE

Custom-made solutions for
commercial, military and offshore

Facet
Filtration Group®

TABLE OF CONTENTS

About Us

Section 1 - Coalescer Separators

Coalescer Separators - General Description

Vertical Coalescer Separators

- EI 1581, 6th Edition, Category C, Type S
- EI 1581, 6th Edition, Category M, Type S

Horizontal Coalescer Separators

- EI 1581, 6th Edition, Category C, Type S
- EI 1581, 6th Edition, Category M, Type S

CA Series - Coalescer Cartridges

CAA Series 5 - Coalescer Cartridges

CB, CC, CR Series - Coalescer Cartridges

CM Series - Coalescer Cartridges

CM100 Series - Coalescer Cartridges

EB Series - Coalescer Cartridges

SS Series - Synthetic Separator Cartridges

SS Series 5 - Synthetic Separator Cartridges

ST Series - Teflon® Separator Cartridges

ST Series 5 - Teflon® Separator Cartridges

Section 2 - Filters

M Series - Filter Housings

M Series - High Efficiency Pleated Paper Filter Cartridges

MG Series - Glass Fiber Filter Cartridges

BS Series - Basket Strainers

Section 3 - Filter Monitors

HFG Series - Horizontal Fuel-Gard® Filter Monitor Housings

FG Series Fuel-Gard® EI 1583 Monitor Cartridges 2" OD - Outside/Inside Flow

FG Series Fuel-Gard® EI 1583 Monitor Cartridges 6" OD - Outside/Inside Flow

GNG Series - Go-No-Go® Monitor Cartridges

Section 4 - All Purpose Filter Housings

Fuel-Gard® VF-21SB/22SB Housing with Coalescer Separator Cartridges

21 Series Cartridges

22 Series Cartridges

Section 5 - Oil Water Separators

Bilge Water Separators with Ceramic Membrane

- CPS 3.2E + EMB
- CPS 3.2E + EMB for Submarines
- CPS-10B MKIII + EMB

Bilge Water Separators with Disposal Membrane

- CPS 3.2E + EBM 14x1
- CPS B MKIII + EBM 14x

Oil Water Separators for Offshore Applications - MAS Series

Section 6 - Systems

Portable Fuel Filtration and Pumping Unit for Helicopters and Light Aircrafts

Lube Oil Conditioners - V Series

JP-5 Fuel Treatment Systems

Turbo-Generator Fuel/Oil Modules

Section 7 - Sewage Water Treatment Systems

STP Series - Sewage Treatment Plants

VTP Series - Sewage Treatment Plants with Built-in Vacuum System

Filtration Group®
Process Technologies

Jonell Systems and Facet Have Formed Process Technologies.

With a passionate team, global footprint and leading technology, Filtration Group is driving innovation and developing unparalleled filtration solutions. Filtration Group serves a highly diverse set of customers with offerings that span life science, process technologies, fluid and indoor air quality applications.

Now, we have integrated decades of experience and exceptional knowledge to provide filtration solutions that are innovative and unprecedented. By combining Facet and Jonell Systems resources, strengths and experience we deliver innovative products and services that go beyond our customer's imaginations.

We optimize filtration processes to improve safety, reliability, productivity and ultimately profitability to make the world safer, healthier and more productive.

Facet
Filtration Group®

75 years providing superior filtration solutions.

Facet has approved aviation fuel filtration solutions and diesel fuel filtration solutions for mining, heavy equipment industries, rail and marine applications among others. With a wide range of vessels and innovative elements with multiple media options, talk to us to solve your filtration challenge.

Coalescer Separators
General Description

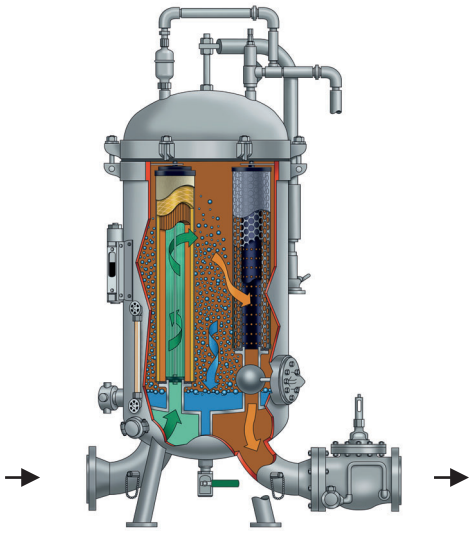

Vertical Two-Stage Coalescer Separator Flow Diagram
(including optional accessories)

Two-stage coalescer separators are the primary defense against fuel contamination by water and dirt. The coalescer separator housings contain both first-stage coalescer and second-stage separator cartridges with no internal moving parts. The product is pumped under pressure to flow through the housing inlet chamber and inside/out through the multi-media coalescer cartridge. This specially developed multi-media cartridge configuration traps and holds minute solid particles to less than one micron, while forcing small water droplets to commingle and grow into heavier, larger drops that fall by gravity to the housing sump area. The cleaned fuel continues to flow outside/in through the second-stage separator cartridges. These separator cartridges strip any remaining water droplets from the fuel allowing only clean, dry fuel to pass.

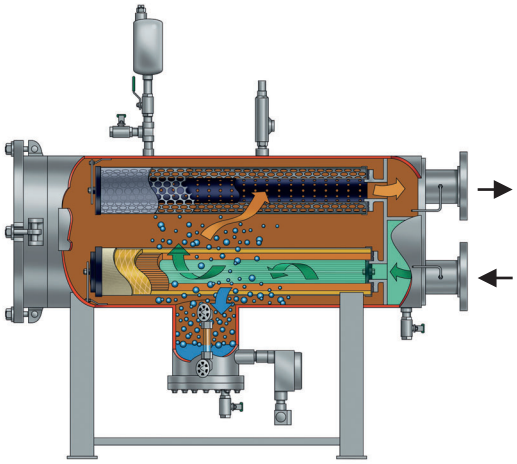

Typical Horizontal End Opening Coalescer Separator Flow Diagram for Fixed Installation (including optional accessories)

Facet two-stage coalescer separators will continuously remove solids and water contaminants from aviation fuels. Vertical and horizontal housing designs are available with a wide selection of coalescer and separator cartridges to meet specific applications. Housings are designed for easy servicing and low maintenance. All are built to EI 1596 with many standard and optional accessories and connections available to facilitate piping and installation requirements. Facet coalescer separators provide a complete system that meets industry standards and individual levels of effluent purity required by commercial airlines, major oil companies and governments, worldwide.

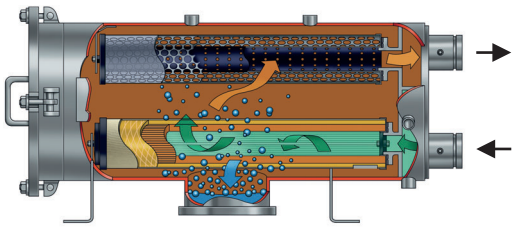

Typical Horizontal End Opening Coalescer Separator Flow Diagram for Mobile Equipment

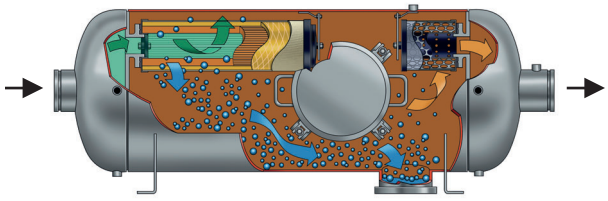

Typical Horizontal Side Opening Coalescer Separator Flow Diagram for Mobile Equipment

VCS Series
Vertical Coalescer Separators for EI 1581, 6th Edition, Category C, Type S

Category C Coalescer Separator housings are for commercial aviation fuel. Type S qualifications can be used at all filtration points in an aviation fueling system. Type S is meant to be used at filtration points where significant levels of water and dirt in the product can be expected. Facet VCS Series Vertical Coalescer Separator housings fully comply with EI 1581, Category C, Type S requirements.

Reliable Performance

Facet coalescer separators are a result of over 50 years of continuous research and development to meet the ever demanding performance requirements in the aviation fuel handling industry. This, along with proven field performance, demonstrates Facet's ability to provide quality products that meet current specifications as well as specific customer requirements for installations in refineries, bulk storage terminals, heliports, airports, etc.

Standard Housing Design

- EI 1596 Design & Construction
- Welded carbon steel construction—other materials available on request
- ASME Code, Section VIII construction, stamped and certified
- Design pressure: 150 psi @ 250˚F—other design pressures available on request
- Inlet, outlet and drain connections permanently marked
- Choice of rod or screw base coalescer cartridge mounting styles
- Interior: Epoxy coated (EI 1541)
- Exterior: Prime coated
- Swing bolt head closures
- Buna-N o-ring closure seal
- Knife edge cartridge mounting seals
- Headlift furnished on 18" (457 mm) OD and larger
- Spider plate attached to vessel wall
- Sloping cartridge plate to drain connection
- 4" inlet/outlet cleanout/inspection connections (when permitted by design)
- Connections provided for options listed below

Options

- Automatic air eliminator with check valve*
- Pressure relief valve*
- Differential pressure gauge*
- Pilot control valve
- Pilot tester
- Water slug control valve
- Electrical water-level alarm
- Water drain valves
- Liquid level gauge
- Blind cover for pilot control mounting flange
- Immersion heaters
- Sampling probes
- Working platform and ladder

(* Mandatory for 6th Edition)

VCS Series
Vertical Coalescer Separators for
EI 1581, 6th Edition, Category C, Type S

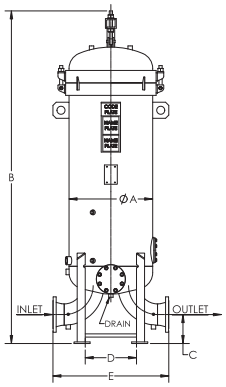

STYLE A

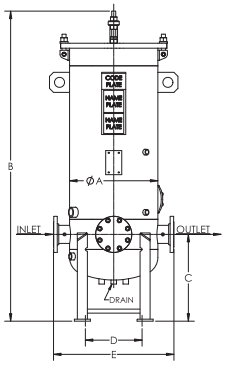

STYLE B

DATA

MODEL NUMBER[1]	FLOW RATE		REQUIRED CARTRIDGES				HOUSING LIQUID VOLUME		HOUSING DRY WEIGHT		HOUSING TYPE
	AVIATION FUEL EI 1581, CAT. C, TYPE S		COALESCER		SEPARATOR						
	gpm	lpm	qty	Model	qty	Model	gal	ltr	lbs	kgs	
VCS-222-116	109	413	2	CAA22-5SB	1	SS616FB-5	35	132	525	238	Style B - Flat
VCS-328-218	222	840	3	CAA28-5SB	2	SS618FB-5	65	246	750	340	Style B - Flat
VCS-433-224	333	1261	4	CAA33-5SB	2	SS624FB-5	90	341	900	408	Style B - Flat
VCS-543-243	609	2305	5	CAA43-5SB	2	SS643FB-5	165	625	1200	544	Style A - Dished
VCS-556-340	782	2960	5	CAA56-5SB	3	SS640FB-5	180	681	1225	556	Style A - Dished
VCS-656-344	938	3551	6	CAA56-5SB	3	SS644FB-5	180	681	1250	567	Style A - Dished
VCS-756-440	1095	4145	7	CAA56-5SB	4	SS640FB-5	210	795	1525	692	Style A - Dished
VCS-856-444	1251	4736	8	CAA56-5SB	4	SS644FB-5	250	946	1675	760	Style A - Dished
VCS-1056-544	1564	5920	10	CAA56-5SB	5	SS644FB-5	320	1211	1875	850	Style A - Dished
VCS-1256-644	1877	7105	12	CAA56-5SB	6	SS644FB-5	385	1457	2575	1168	Style A - Dished
VCS-1356-744	2034	7700	13	CAA56-5SB	7	SS644FB-5	465	1760	2600	1179	Style A - Dished
VCS-1656-844	2500	9464	16	CAA56-5SB	8	SS644FB-5	530	2006	3000	1361	Style A - Dished

Other sizes available on request.
* Separators: If preferred, Teflon® separator cartridges can be used. Consult Factory for flow rates.
The separator cartridge model number's prefix would change from SS to ST. Example: SS644FB-5 would change to ST644FB-5

DIMENSIONS

MODEL NUMBER[1]	INLET/ OUTLET DIAMETER		MAIN DRAIN	DIMENSIONS[2]									
				A		B		C		D		E	
	in	mm	in	in	mm	in	mm	in	mm	in	mm	in	mm
VCS-222-116	2	51	¾	16	406	66¼	1683	20	508	10	254	24	610
VCS-328-218	3	76	¾	20	508	73½	1867	21	533	12¾	324	28	711
VCS-433-224	4	102	¾	22	559	80½	2045	21¾	552	14¼	362	30	762
VCS-543-243	6	152	¾	26	660	103½	2629	9	229	16	406	36	914
VCS-556-340	6	152	¾	26	660	109½	2781	9	229	16	406	36	914
VCS-656-344	6	152	¾	26	660	109½	2781	9	229	16	406	36	914
VCS-756-440	8	203	1½	28	711	114¼	2902	10	254	17½	445	45	1143
VCS-856-444	8	203	1½	30	762	115	2921	10	254	19½	495	46	1168
VCS-1056-544	8	203	1½	34	864	117½	2985	10	254	22¼	565	48	1219
VCS-1256-644	10	254	1½	36	914	123¾	3143	11	279	24¼	616	55	1397
VCS-1356-744	10	254	1½	38	1016	124¾	3169	11	279	26½	673	56	1422
VCS-1656-844	12	305	1½	42	1067	129¾	3296	12	305	28	711	66	1676

REFERENCE NOTES:
(1) Model numbers include housing and required cartridges.
(2) Dimensions are approximate and should not be used for installation purposes.

NOTES:
a. All elements are mounted against knife edge seals.
b. Nameplate to be stamped with EI classified data.
c. Inlet chamber to be hydrostatic tested at 115 psi.
d. Coalescer cartridges are offered with a choice of rod or screw base mounting. The suffix "SB" will be added to the coalescer model number when screw base is required. Example: CAA28-5 = Rod Mount / CAA28-5SB = Screw Base

VCS Series
Vertical Coalescer Separators for EI 1581, 6th Edition, Category M, Type S

Category M Coalescer Separator housings are for Military JP-8 or JP-5 fuel. Type S qualifications can be used at all filtration points in an aviation fueling system. Type S is meant to be used at filtration points where significant levels of water and dirt in the product can be expected. Facet VCS Series Vertical Coalescer Separator housings fully comply with EI 1581, Category M, Type S requirements.

Reliable Performance

Facet coalescer separators are a result of over 50 years of continuous research and development to meet the ever demanding performance requirements in the aviation fuel handling industry. This, along with proven field performance, demonstrates Facet's ability to provide quality products that meet current specifications as well as specific customer requirements for installations in refineries, bulk storage terminals, heliports, airports, etc.

Standard Housing Design

- EI 1596 Design & Construction
- Welded carbon steel construction—other materials available on request
- ASME Code, Section VIII construction, stamped and certified
- Design pressure: 150 psi @ 250˚F—other design pressures available on request
- Inlet, outlet and drain connections permanently marked
- Choice of rod or screw base coalescer cartridge mounting styles
- Interior: Epoxy coated (EI 1541)
- Exterior: Prime coated
- Swing bolt head closures
- Buna-N o-ring closure seal
- Knife edge cartridge mounting seals
- Headlift furnished on 18" (457 mm) OD and larger
- Spider plate attached to vessel wall
- Sloping cartridge plate to drain connection
- 4" inlet/outlet cleanout/inspection connections (when permitted by design)
- Connections provided for options listed below

Options

- Automatic air eliminator with check valve*
- Pressure relief valve*
- Differential pressure gauge*
- Pilot control valve
- Pilot tester
- Water slug control valve
- Electrical water-level alarm
- Water drain valves
- Liquid level gauge
- Blind cover for pilot control mounting flange
- Immersion heaters
- Sampling probes
- Working platform and ladder

(* Mandatory for 6th Edition)

VCS Series
Vertical Coalescer Separators for
EI 1581, 6th Edition, Category M, Type S

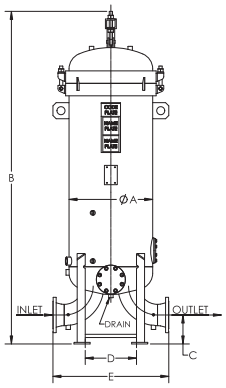

STYLE A

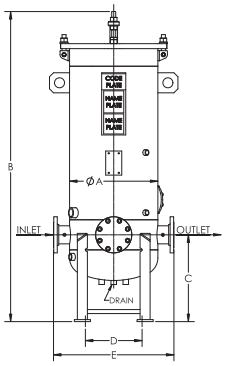

STYLE B

DATA

MODEL NUMBER[1]	FLOW RATE		REQUIRED CARTRIDGES				HOUSING LIQUID VOLUME		HOUSING DRY WEIGHT		HOUSING TYPE
	AVIATION FUEL EI 1581 CAT. M, TYPE S		COALESCER		SEPARATOR						
	gpm	lpm	qty	Model	qty	Model	gal	ltr	lbs	kg	
VCS-222-116	85	322	2	CM-22SB-5	1	SM-16FB-5	35	132	525	238	Style B - Flat
VCS-328-218	173	655	3	CM-28SB-5	2	SM-18FB-5	65	246	750	340	Style B - Flat
VCS-433-224	260	984	4	CM-33SB-5	2	SM-24FB-5	90	341	900	408	Style B - Flat
VCS-543-243	474	1794	5	CM-43SB-5	2	SM-43FB-5	165	625	1200	544	Style A - Dished
VCS-556-340	609	2305	5	CM-56SB-5	3	SM-40FB-5	180	681	1225	556	Style A - Dished
VCS-656-344	730	2763	6	CM-56SB-5	3	SM-44FB-5	180	681	1250	567	Style A - Dished
VCS-756-440	852	3225	7	CM-56SB-5	4	SM-40FB-5	210	795	1525	692	Style A - Dished
VCS-856-444	974	3687	8	CM-56SB-5	4	SM-44FB-5	250	946	1675	760	Style A - Dished
VCS-956-540	1096	4149	9	CM-56SB-5	5	SM-40FB-5	285	1079	1800	816	Style A - Dished
VCS-1056-544	1218	4611	10	CM-56SB-5	5	SM-44FB-5	320	1211	1875	850	Style A - Dished
VCS-1256-644	1461	5530	12	CM-56SB-5	6	SM-44FB-5	385	1457	2575	1168	Style A - Dished
VCS-1356-744	1583	5992	13	CM-56SB-5	7	SM-44FB-5	465	1760	2600	1179	Style A - Dished
VCS-1656-844	1944	7359	16	CM-56SB-5	8	SM-44FB-5	530	2006	3000	1361	Style A - Dished

Other sizes available on request.

DIMENSIONS

MODEL NUMBER[1]	INLET/ OUTLET DIAMETER		MAIN DRAIN	DIMENSIONS[2]									
				A		B		C		D		E	
	in	mm	in	in	mm	in	mm	in	mm	in	mm	in	mm
VCS-222-116	2	51	¾	16	406	66¼	1683	20	508	10	254	24	610
VCS-328-218	3	76	¾	20	508	73½	1867	21	533	12¾	324	28	711
VCS-433-224	4	102	¾	22	559	80½	2045	21¾	552	14¼	362	30	762
VCS-543-243	6	152	¾	26	660	103½	2629	9	229	16	406	36	914
VCS-556-340	6	152	¾	26	660	109½	2781	9	229	16	406	36	914
VCS-656-344	6	152	¾	26	660	109½	2781	9	229	16	406	36	914
VCS-756-440	8	203	1½	28	711	114¼	2902	10	254	17½	445	45	1143
VCS-856-444	8	203	1½	30	762	115	2921	10	254	19½	495	46	1168
VCS-956-540	8	203	1½	32	813	115¾	2940	10	254	20¾	527	46	1168
VCS-1056-544	8	203	1½	34	864	117½	2985	10	254	22¼	565	48	1219
VCS-1256-644	10	254	1½	36	914	123¾	3143	11	279	24¼	616	55	1397
VCS-1356-744	10	254	1½	40	1016	124¾	3169	11	279	26½	673	56	1422
VCS-1656-844	12	305	1½	42	1067	129¾	3296	12	305	28	711	66	1676

REFERENCE NOTES:
(1) Model numbers include housing and required cartridges.
(2) Dimensions are approximate and should not be used for installation purposes.

NOTES:
a. All elements are mounted against knife edge seals.
b. Nameplate to be stamped with EI classified data.
c. Inlet chamber to be hydrostatic tested at 115 psi.
d. Coalescer cartridges are offered with a choice of rod or screw base mounting. The suffix "SB" will be added to the coalescer model number when screw base is required. Example: CM-28-5 = Rod Mount / CM-28-5SB = Screw Base

HCS Series (End Opening)
Horizontal Coalescer Separators for Fixed Installations
EI 1581, 6th Edition, Category C, Type S

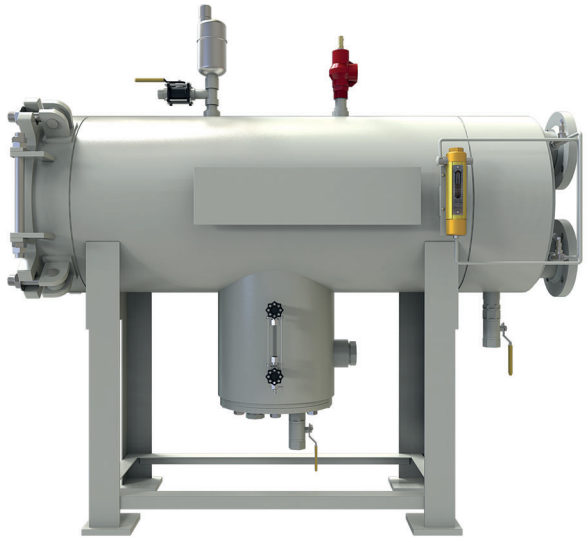

Category C Coalescer Separator housings are for commercial aviation fuel. Type S qualifications can be used at all filtration points in an aviation fueling system. Type S is meant to be used at filtration points where significant levels of water and dirt in the product can be expected. Facet HCS Series Horizontal Coalescer Separator housings fully comply with EI 1581, Category C, Type S requirements.

Reliable Performance

Facet coalescer separators are a result of over 50 years of continuous research and development to meet the ever demanding performance requirements in the aviation fuel handling industry. This, along with proven field performance, demonstrates Facet's ability to provide quality products that meet current specifications as well as specific customer requirements for installations in refineries, bulk storage, terminals, heliports, airports, etc.

Standard Housing Design

- EI 1596 Design & Construction
- Welded carbon steel construction—other materials available on request
- ASME Code, Section VIII construction, stamped and certified
- Design pressure: 150 psi @ 250°F—other design pressures available on request
- Inlet, outlet and drain connections permanently marked
- Interior: Epoxy coated (EI 1541)
- Exterior: Prime coated
- Swing bolt head closures
- Hinged end opening cover
- Flanged inlet and outlet connections
- Buna-N o-ring closure seal
- Choice of rod or screw base coalescer cartridge mounting styles
- 4" inlet/outlet cleanout/inspection connections (when permitted by design)
- Knife edge cartridge mounting seals
- Spider plate attached to vessel wall

Options

- Automatic air eliminator with check valve*
- Pressure relief valve*
- Differential pressure gauge*
- Pilot control valve
- Pilot tester
- Water slug control valve
- Electrical water-level alarm
- Water drain valves
- Liquid level gauge
- Blind cover for pilot control mounting flange
- Immersion heaters
- Sampling probes

(* Mandatory for 6th Edition)

HCS Series (End Opening)
Horizontal Coalescer Separators for Fixed Installations
EI 1581, 6th Edition, Category C, Type S

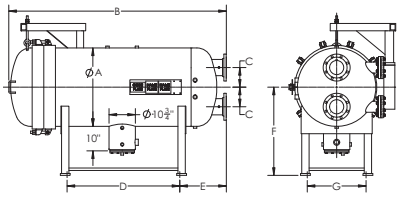

STYLE A

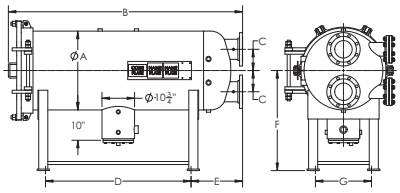

STYLE B

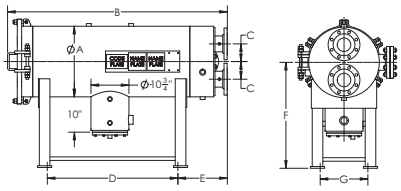

STYLE C

DATA

MODEL NUMBER[1]	FLOW RATE		REQUIRED CARTRIDGES				HOUSING LIQUID VOLUME		HOUSING DRY WEIGHT		HOUSING TYPE
	AVIATION FUEL EI 1581 CAT. C, TYPE S		COALESCER		SEPARATOR						
	gpm	lpm	qty	Model	qty	Model	gal	ltr	lbs	kg	
HCS-222-1324	105	397	2	CAA22-5SB	1	SS324FA-5	24	91	425	193	Style C - Flat
HCS-322-1424	157	594	3	CAA22-5SB	1	SS424FB-5	29	110	500	227	Style C - Flat
HCS-333-1436	244	924	3	CAA33-5SB	1	SS436FB-5	38	144	550	249	Style C - Flat
HCS-343-133	334	1264	3	CAA43-5SB	1	SS633FB-5	60	227	700	318	Style C - Flat
HCS-443-143	445	1685	4	CAA43-5SB	1	SS643FF-5	72	273	775	352	Style C - Flat
HCS-556-233	686	2597	5	CAA56-5SB	2	SS633FF-5	107	405	950	431	Style B - Dished
HCS-756-248	1000	3785	7	CAA56-5SB	2	SS648FF-5	151	572	1325	601	Style B - Dished
HCS-856-340	1234	4671	8	CAA56-5SB	3	SS640FF-5	270	1022	1700	771	Style A - Dished
HCS-1056-348	1543	5841	10	CAA56-5SB	3	SS648FF-5	350	1325	1975	896	Style A - Dished

Other sizes available on request.
* Separators: If preferred, Teflon® separator cartridges can be used in place of Synthetic.
The separator cartridge model number's prefix would change from SS to ST. Example: SS324FA-5 would change to ST324FA-5

DIMENSIONS

MODEL NUMBER[1]	INLET/ OUTLET DIAMETER		DIMENSIONS[2]													
			A		B		C		D		E		F		G	
	in	mm	in	mm	in	mm	in	mm	in	mm	in	mm	in	mm	in	mm
HCS-222-1324	2	51	14	356	41½	1054	4	102	18	457	13½	343	25	635	9½	241
HCS-322-1424	3	76	16	406	39¾	1010	5	127	16	406	13½	343	28	711	10	254
HCS-333-1436	3	76	16	406	50½	1283	5	127	26	660	14	356	28	711	10	254
HCS-343-133	4	102	18	457	62½	1588	5	127	38	965	14	356	29	737	12	305
HCS-443-143	4	102	20	508	62¼	1581	5	127	37	940	14	356	30	762	13½	343
HCS-556-233	6	152	22	559	76	1930	6	152	49	1245	15	381	31	787	15½	394
HCS-756-248	6	152	26	660	77½	1969	7	178	49	1245	16½	419	33	838	18½	470
HCS-856-340	6	152	32	813	89	2261	8	203	48	1219	18	457	36	914	24	610
HCS-1056-348	8	203	36	914	91	2311	8	203	48	1219	19	483	38	965	27	686

REFERENCE NOTES:
(1) Model numbers include housing style and required cartridge mounting.
(2) Dimensions are approximate and should not be used for installation purposes.

NOTES:
a. All elements are mounted against knife edge seals.
b. Nameplate to be stamped with EI classified data.
c. Inlet chamber to be hydrostatic tested at 115 psi (793 kPa).
d. Coalescer cartridges are offered with a choice of rod or screw base mounting. The suffix "SB" will be added to the coalescer model number when screw base is required.
Example: CAA33-5 = Rod Mount / CAA33-5SB = Screw Base

HCS Series (End Opening)
Horizontal Coalescer Separators for Fixed Installations
EI 1581, 6th Edition, Category M, Type S

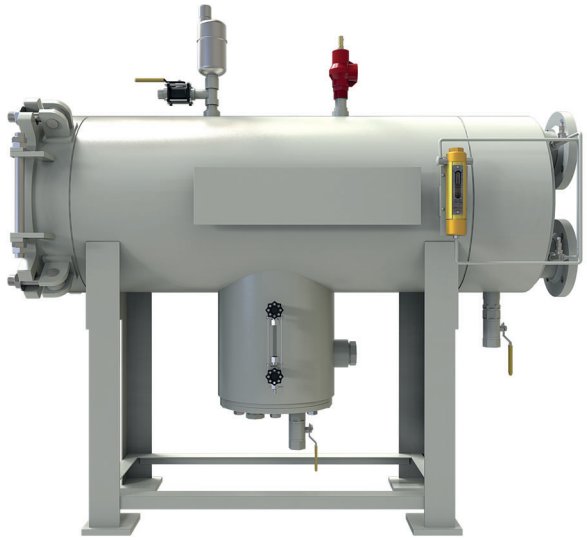

Category M Coalescer Separator housings are for Military JP-8 or JP-5 fuel. Type S qualifications can be used at all filtration points in an aviation fueling system. Type S is meant to be used at filtration points where significant levels of water and dirt in the product can be expected. Facet HCS Series Horizontal Coalescer Separator housings fully comply with EI 1581, Category M, Type S requirements.

Reliable Performance

Facet coalescer separators are a result of over 50 years of continuous research and development to meet the ever demanding performance requirements in the aviation fuel handling industry. This, along with proven field performance, demonstrates Facet's ability to provide quality products that meet current specifications as well as specific customer requirements for installations in refineries, bulk storage, terminals, heliports, airports, etc.

Standard Housing Design

- EI 1596 Design & Construction
- Welded carbon steel construction—other materials available on request
- ASME Code, Section VIII construction, stamped and certified
- Design pressure: 150 psi @ 250°F—other design pressures available on request
- Inlet, outlet and drain connections permanently marked
- Interior: Epoxy coated (EI 1541)
- Exterior: Prime coated
- Swing bolt head closures
- Hinged end opening cover
- Flanged inlet and outlet connections
- Buna-N o-ring closure seal
- Choice of rod or screw base coalescer cartridge mounting styles
- 4" inlet/outlet cleanout/inspection connections (when permitted by design)
- Knife edge cartridge mounting seals
- Spider plate attached to vessel wall

Options

- Automatic air eliminator with check valve*
- Pressure relief valve*
- Differential pressure gauge*
- Pilot control valve
- Pilot tester
- Water slug control valve
- Electrical water-level alarm
- Water drain valves
- Liquid level gauge
- Blind cover for pilot control mounting flange
- Immersion heaters
- Sampling probes

(* Mandatory for 6th Edition)

HCS Series (End Opening)
Horizontal Coalescer Separators for Fixed Installations
EI 1581, 6th Edition, Category M, Type S

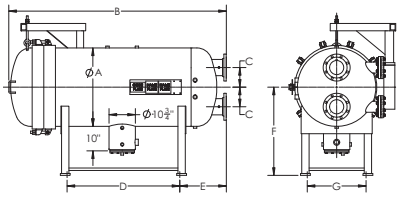

STYLE A

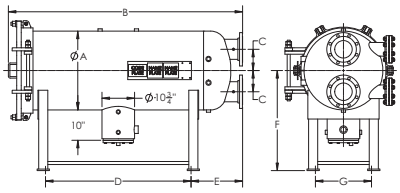

STYLE B

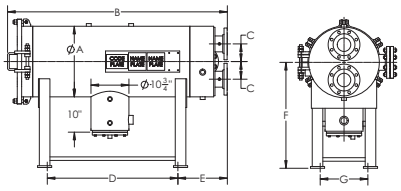

STYLE C

DATA

MODEL NUMBER[1]	FLOW RATE		REQUIRED CARTRIDGES				HOUSING LIQUID VOLUME		HOUSING DRY WEIGHT		HOUSING TYPE
	AVIATION FUEL EI 1581 CAT. M, TYPE S		COALESCER		SEPARATOR						
	gpm	lpm	qty	Model	qty	Model	gal	ltr	lbs	kg	
HCS-322-1424	157	594	3	CM-22SB-5	1	SM-424FB-5	29	110	500	227	Style C - Flat
HCS-333-1436	243	920	3	CM-33SB-5	1	SM-436FB-5	38	144	550	249	Style C - Flat
HCS-438-138	302	1143	4	CM-38SB-5	1	SM-38FF-5	80	303	850	386	Style C - Flat
HCS-456-229	478	1809	4	CM-56SB-5	2	SM-29FB-5	129	488	1050	476	Style B - Dished
HCS-556-236	605	2290	5	CM-56SB-5	2	SM-36FF-5	151	572	1325	601	Style B - Dished
HCS-756-248	808	3059	7	CM-56SB-5	2	SM-48FF-5	226	856	1600	726	Style A - Dished

Other sizes available on request.

DIMENSIONS

MODEL NUMBER[1]	INLET/ OUTLET DIAMETER		DIMENSIONS[2]													
			A		B		C		D		E		F		G	
	in	mm	in	mm	in	mm	in	mm	in	mm	in	mm	in	mm	in	mm
HCS-322-1424	3	76	16	406	39¾	1010	5	127	16	406	13½	343	28	711	10	254
HCS-333-1436	3	76	16	406	50½	1283	5	127	26	660	14	356	28	711	10	254
HCS-438-138	3	76	22	559	57¼	1454	6	152	32	813	14	356	31	787	13½	343
HCS-456-229	4	102	24	610	77½	1969	6	152	48	1219	15	381	32	813	16½	419
HCS-556-236	6	152	26	660	77¼	1969	7	178	48	1219	17	432	33	838	18½	470
HCS-756-248	6	152	32	813	75¾	1924	8	203	33	838	19	483	36	914	24	610

REFERENCE NOTES:

(1) Model numbers include housing style and required cartridge mounting.
(2) Dimensions are approximate and should not be used for installation purposes.

NOTES:

a. All elements are mounted against knife edge seals.
b. Nameplate to be stamped with EI classified data.
c. Inlet chamber to be hydrostatic tested at 115 psi (793 kPa).
d. Coalescer cartridges are offered with a choice of rod or screw base mounting. The suffix “SB” will be added to the coalescer model number when screw base is required. Example: CM-33-5 = Rod Mount / CM-33SB-5 = Screw Base

CA Series
Coalescer Cartridges

For Maximum Water Coalescing Efficiency and Solids Holding Capacity

Facet CA Series coalescer cartridges offer the finest performance available. This standard line of high flow coalescer cartridges removes ultra-fine solids and enhances separation of water from jet fuel.

Built for balanced fluid flow-thru and structural strength, each CA Series coalescer cartridge is a single-piece construction of various combined media, precisely arranged in many layers and pleats, wrapped around a treated, perforated metal shell —all encased in an outer sock material. All cartridges are 6" (152 mm) outside diameter, the standard model has an inside diameter of 3½" (89 mm) and available in standard interchangeable nominal lengths from from 11¼" (290 mm) to 57¼" (1450 mm).

The CA Series coalescer cartridges are available in two cartridge mounting styles: self-centering rod mount and screw base. The rod mount style has treated metal end caps, while the screw base ends are injection molded, glass-filled nylon. This screw base material offers superior strength and ease of maintenance —uniform threads, no shrinkage, no galling and no gasket to recover.

A permanent affixed Buna-N gasket seals against the V-type knife edge mounting adaptor to provide a positive seal. It will not separate from the cartridge during installation or change out.

Standard Design Features

- Multi-layered media for increased solids holding capacity
- Ultra-fine solids removal
- Maximum water coalescence
- Balanced cartridge flow characteristics
- Recommended maximum operating temperature: 240°F (115°C)
- Withstand in excess of 75 psi differential pressure
- pH range from 5 to 9
- Screw base or open-end configuration

Materials

- All metal components are treated against corrosion
- Screw base ends are injection molded, glass-filled nylon with locked-in gaskets
- Buna-N gaskets —other materials are available on request

CA Series
Coalescer Cartridges

DATA

MODEL NUMBER	OUTSIDE DIAMETER		INSIDE DIAMETER		NOMINAL LENGTH		MOUNTING STYLE
	in	mm	in	mm	in	mm	
CA11	6	152	3½	89	11¼	290	Rod
CA14	6	152	3½	89	14½	370	Rod
CA14SB	6	152	3½	89	15	380	Screw Base
CA22	6	152	3½	89	22¼	560	Rod
CA22SB	6	152	3½	89	23	580	Screw Base
CA28	6	152	3½	89	28¾	730	Rod
CA28SB	6	152	3½	89	29	740	Screw Base
CA33	6	152	3½	89	33¼	840	Rod
CA33SB	6	152	3½	89	34	860	Screw Base
CA38	6	152	3½	89	38	960	Rod
CA38SB	6	152	3½	89	39	990	Screw Base
CA43	6	152	3½	89	43¼	1100	Rod
CA43SB	6	152	3½	89	45	1140	Screw Base
CA56	6	152	3½	89	56¼	1430	Rod
CA56SB	6	152	3½	89	57	1450	Screw Base

NOTE: The Facet screw base adaptor part number is 677453A-AM.

CAA Series 5
Coalescer Cartridges
Qualified to EI 1581, 6th Edition, Category C

For Maximum Water Coalescing Efficiency and Solids Holding Capacity

Facet CAA Series 6 coalescer cartridges offer the finest performance available. This standard line of high flow coalescer cartridges removes ultra-fine solids and enhances separation of water from jet fuel.

The Facet coalescer separator housings equipped with CAA Series 6 coalescer and companion separator cartridges have been tested and fully qualified to meet the performance requirements to EI 1581, Sixth Edition, Category C (Category C replaces the previous class A, B, and C of API 1581 3rd Edition.)

Built for balanced fluid flow-thru and structural strength, each CAA Series 6 coalescer cartridge is a single-piece construction of various combined media, precisely arranged in many layers and pleats, wrapped around a coated, perforated metal center tube —all encased in an outer sock material. All are 6" OD (152 mm) by 3½" ID (89 mm) and available in standard interchangeable nominal lengths from 11¼" (290 mm) to 57¼" (1450 mm).

The CAA Series 6 coalescer cartridges are available in two cartridge mounting styles: self-centering rod mount and screw base. The rod mount style has treated metal end caps, while the screw base ends are injection molded, glass-filled nylon. This screw base material offers superior strength and ease of maintenance—uniform threads, no shrinkage, no galling and no gasket to recover.

A permanently affixed Buna-N gasket seals against the V-type knife edge mounting adaptor to provide a positive seal. It will not separate from the cartridge during installation or change out.

Standard Design Features

- Qualified to the Sixth Edition of EI 1581, Category C
- Multi-layered media for increased solids holding capacity
- Ultra-fine solids removal
- Maximum water coalescence
- Balanced cartridge flow characteristics
- Recommended maximum operating temperature: 240°F (115°C)
- Withstand in excess of 75 psi differential pressure
- pH range from 5 to 9
- Screw base or open-end configuration

Materials

- All metal components are treated against corrosion
- Screw base ends are injection molded, glass-filled nylon with locked-in gaskets
- Buna-N gaskets —other materials are available on request

CAA Series 5
Coalescer Cartridges
Qualified to EI 1581, 6th Edition, Category C

DATA

MODEL NUMBER	OUTSIDE DIAMETER		INSIDE DIAMETER		NOMINAL LENGTH		MOUNTING STYLE
	in	mm	in	mm	in	mm	
CAA11-5	6	152	3½	89	11¼	290	Rod
CAA14-5	6	152	3½	89	14½	370	Rod
CAA14-5SB	6	152	3½	89	15	380	Screw Base
CAA22-5	6	152	3½	89	22¼	560	Rod
CAA22-5SB	6	152	3½	89	23	580	Screw Base
CAA28-5	6	152	3½	89	28¾	730	Rod
CAA28-5SB	6	152	3½	89	29	740	Screw Base
CAA33-5	6	152	3½	89	33¼	840	Rod
CAA33-5SB	6	152	3½	89	34	860	Screw Base
CAA38-5	6	152	3½	89	38	960	Rod
CAA38-5SB	6	152	3½	89	39	990	Screw Base
CAA43-5	6	152	3½	89	43¼	1100	Rod
CAA43-5SB	6	152	3½	89	45	1140	Screw Base
CAA56-5	6	152	3½	89	56¼	1430	Rod
CAA56-5SB	6	152	3½	89	57	1450	Screw Base

NOTE: The Facet screw base adaptor part number is 677453A-AM.

CB, CC, CR Series
Coalescer Cartridges

Description

Facet coalescer cartridges provide efficient and economical filtration and coalescence of fluids in a wide range of applications where EI certification is not required. This broad range of liquid/liquid coalescers provides greater coalescing efficiency and contaminant holding capacity than most conventional coalescers or other separation techniques. As a result, Facet coalescers improve product quality, reduce maintenance costs and help prevent unscheduled shutdowns.

Facet coalescer cartridges are manufactured using proprietary combinations of high performance filter media. Years of research and development in phase separation technology has enabled Facet to develop a very broad range of filter grades to meet the stringent requirements of industrial applications.

Facet coalescer cartridges are available in numerous configurations to replace most conventional coalescing cartridges. In addition, Facet can develop special configurations to meet specific applications requirements.

Benefits

- High Performance filter media provides effective particle removal and coalescence in a wide range of applications
- Proprietary design provides superior performance when compared to conventional coalescing cartridges
- Continuous lengths minimize process downtime, reduce cartridge change-out costs and eliminate filter bypass concerns
- Retention ratings available from 1 to 40 microns
- 90-95% nominal efficiency solids removal ratings. Water removal is 15 ppm
- Electro-tin plated components help prevent rust and corrosion. Coated components are available as standard options
- 75 psid burst strength permits use in demanding applications

CB, CC, CR Series
Coalescer Cartridges

PERFORMANCE SPECIFICATION

SERIES	NOMINAL PARTICULATE MICRON								
	1	2	5	10	15	20	25	30	40
CR		•							
CB			•						
CC								•	

FREE WATER REMOVAL SPECIFICATIONS

SERIES	PPM FREE WATER, LESS THAN				
	5	10	15	20	40
CR		•	•	•	•
CB			•	•	•
CC				•	•

MATERIALS

Filter media options:

2 - 25 µm: Combination of Fiberglass and Cellulose Medias with Outer Sock

Gasket Materials:

Standard: Buna-N

Optional: Vegetable Fiber, Neoprene, Viton®, Non-asbestos Replacement

Metal Components:

Standard: Electro-tin Plated Components

Optional: Powder Coated Epoxy

Adhesives:

Thermoset PVC
Urethane (optional)
Epoxy (optional)

FILTER SIZES AND DIMENSIONS

SERIES	OD		ID		LENGTH	
	in	mm	in	mm	in	mm
Cz11	6	152	3 ½	89	11 ¼	286
Cz14	6	152	3 ½	89	14 ½	368
Cz22	6	152	3 ½	89	22 ¼	565
Cz28	6	152	3 ½	89	28 ¾	730
Cz28-SB	6	152	3 ½	89	29	737
Cz33	6	152	3 ½	89	33 ¼	845
Cz33-SB	6	152	3 ½	89	34	864
Cz43	6	152	3 ½	89	43 ¼	1099
Cz43-SB	6	152	3 ½	89	45	1143
Cz56	6	152	3 ½	89	56 ¼	1429
Cz56-SB	6	152	3 ½	89	57	1448

µ = Micron Rating
Z = Series designation
Note: Water removal ratings are based on kerosene type fuel, S.G.O.78 and viscosity of 33 SSU at 70°F and recommended flow rates. Removal efficiencies will vary with S.G. viscosity, temperature, and flow rate. Please call us for exact sizing and removal ratings

TEMPERATURE / COMPATIBILITY GUIDE

SERIES	MAXIMUM TEMPERATURE	pH RANGE	PETROLEUM PRODUCTS	CHEMICALS
CR, CB, CC	240 °F	5 - 9	Excellent	Good

CARTRIDGE ORDERING INFORMATION

SERIES	DIMENSIONS	END CONFIGURATION	MICRON RATING	SPECIAL FEATURES
CB	28	SB	5	
CB, CR, CC	See Filter Sizes and Dimensions Table	SB = Screw Base No symbol = Double Open End	1, 2, 5, 10, 15, 20, 25, 30, 40	No Symbol = Buna-N J = Non-Asbestos Gasket N = Neoprene Gasket K = Tin Steel Components V = Viton Gasket

CM Series 5
Coalescer Cartridges
Qualified to EI 1581 6th Edition, Category M

For Maximum Water Coalescing Efficiency and Solids Holding Capacity

Facet CM Series 5 coalescer cartridges offer the finest performance available. This line of high flow coalescer cartridges removes ultra-fine solids and enhances separation of water from jet fuel.

The Facet coalescer separator housings equipped with CM Series 5 coalescer and companion separator cartridges have been tested and fully qualified to EI 1581, 6th Edition, for category "M", in both vertical and horizontal orientations.

Built for balanced fluid flow-thru and structural strength, each CM Series 5 coalescer cartridge is a single piece construction of various combined media, precisely arranged in many layers and pleats, wrapped around a coated, perforated metal center tube- all encased in an outer sock material. All are 6” OD (152 mm) by 3.5” ID (89 mm) and available in standard interchangeable nominal lengths in increments from 11.25” (290 mm) to 57.25” (1450 mm).

The CM Series 5 colaescer cartridges are available in two cartridge mounting styles; self-centering rod mount and screw base. The rod mount style has treated metal end caps, while the screw base ends are injection molded, glass-filled nylon. This screw base material offers superior strength and ease of maintenance- uniform threads, no shrinkage, no galling and no gasket recover.

A permanently affixed Buna gasket seals against the V-type knife edge mounting adaptor to provide a positive seal. It will not separate from the cartridge during installation or change out.

Standard Design Features

- Qualified to the Sixth Edition of EI 1581 for all category M
- Multi-layered media for increased solids holding capacity
- Ultra-fine solids removal
- Maximum water coalescence
- Balanced cartridge flow characteristics
- Recommended maximum operating temperature: 240°F (115°C)
- Withstands excess of 75 psi differential pressure
- pH range from 5 to 9
- Choice of self-centering rod or screw base coalescer cartridge mounting styles

Materials

- All metal components are treated against corrosion
- Screw base ends are injection molded, glass-filled nylon with locked-in gaskets
- Buna-N gaskets —other materials are available on request

CM Series 5
Coalescer Cartridges
Qualified to EI 1581 6th Edition, Category M

DATA

MODEL NUMBER	OUTSIDE DIAMETER		INSIDE DIAMETER		NOMINAL LENGTH		MOUNTING STYLE
	in	mm	in	mm	in	mm	
CM-11-5	6	152	3½	89	11¼	290	Rod
CM-14-5	6	152	3½	89	14½	370	Rod
CM-14SB-5	6	152	3½	89	15	380	Screw Base
CM-22-5	6	152	3½	89	22¼	560	Rod
CM-22SB-5	6	152	3½	89	23	580	Screw Base
CM-28-5	6	152	3½	89	28¾	730	Rod
CM-28SB-5	6	152	3½	89	29	740	Screw Base
CM-33-5	6	152	3½	89	33¼	840	Rod
CM-33SB-5	6	152	3½	89	34	860	Screw Base
CM-38-5	6	152	3½	89	38	960	Rod
CM-38SB-5	6	152	3½	89	39	990	Screw Base
CM-43-5	6	152	3½	89	43¼	1100	Rod
CM-43SB-5	6	152	3½	89	45	1140	Screw Base
CM-56-5	6	152	3½	89	56¼	1430	Rod
CM-56SB-5	6	152	3½	89	57	1450	Screw Base

NOTE: The Facet screw base adaptor part number is 677453A-AM.

CM100 Series
Coalescer Cartridges
Qualified to EI 1581 6th Edition, Category M100

For Maximum Water Coalescing Efficiency and Solids Holding Capacity

Facet CM100 Series coalescer cartridges offer the finest performance available. This line of high flow coalescer cartridges removes ultra-fine solids and enhances separation of water from jet fuel.

The Facet coalescer separator housings equipped with CM100 Series coalescer and companion separator cartridges have been tested and fully qualified to EI 1581, 6th Edition, for category "M", in both vertical and horizontal orientations.

Built for balanced fluid flow-thru and structural strength, each CM100 Series coalescer cartridge is a single piece construction of various combined media, precisely arranged in many layers and pleats, wrapped around a coated, perforated metal center tube- all encased in an outer sock material. All are 6” OD (152 mm) by 3.5” ID (89 mm) and available in standard interchangeable nominal lengths in increments from 11.25” (290 mm) to 57.25” (1450 mm).

The CM100 Series 6 colaescer cartridges are available in two cartridge mounting styles; self-centering rod mount and screw base. The rod mount style has treated metal end caps, while the screw base ends are injection molded, glass-filled nylon. This screw base material offers superior strength and ease of maintenance- uniform threads, no shrinkage, no galling and no gasket recover.

A permanently affixed Buna gasket seals against the V-type knife edge mounting adaptor to provide a positive seal. It will not separate from the cartridge during installation or change out.

Standard Design Features

- Qualified to the Sixth Edition of EI 1581 for all category M
- Multi-layered media for increased solids holding capacity
- Ultra-fine solids removal
- Maximum water coalescence
- Balanced cartridge flow characteristics
- Recommended maximum operating temperature: 240°F (115°C)
- Withstands excess of 75 psi differential pressure
- pH range from 5 to 9
- Choice of self-centering rod or screw base coalescer cartridge mounting styles

Materials

- All metal components are treated against corrosion
- Screw base ends are injection molded, glass-filled nylon with locked-in gaskets
- Buna-N gaskets —other materials are available on request

CM100 Series
Coalescer Cartridges
Qualified to EI 1581 6th Edition, Category M100

DATA

MODEL NUMBER	OUTSIDE DIAMETER		INSIDE DIAMETER		NOMINAL LENGTH		MOUNTING STYLE
	in	mm	in	mm	in	mm	
CM11	6	152	3½	89	11¼	290	Rod
CM14	6	152	3½	89	14½	370	Rod
CM14SB	6	152	3½	89	15	380	Screw Base
CM22	6	152	3½	89	22¼	560	Rod
CM22SB	6	152	3½	89	23	580	Screw Base
CM28	6	152	3½	89	28¾	730	Rod
CM28SB	6	152	3½	89	29	740	Screw Base
CM33	6	152	3½	89	33¼	840	Rod
CM33SB	6	152	3½	89	34	860	Screw Base
CM38	6	152	3½	89	38	960	Rod
CM38SB	6	152	3½	89	39	990	Screw Base
CM43	6	152	3½	89	43¼	1100	Rod
CM43SB	6	152	3½	89	45	1140	Screw Base
CM56	6	152	3½	89	56¼	1430	Rod
CM56SB	6	152	3½	89	57	1450	Screw Base

NOTE: The Facet screw base adaptor part number is 677453A-AM.

EB Series
Coalescer Cartridges

Benefits

- pH range from 5 to 9
- Multi-layered media for solids holding
- Solids removal: 15 micron nominal
- Removes oil down to 5 ppm
- Balanced flow characteristics
- Self-centering rod mount
- Recommended maximum operating temperature: 240°F
- Maximum differential pressure: 75 psi (5.25 kg/cm²)
- Flow direction: Inside to out

Applications

- Bilge & Ballast water
- Ship building and repair yards
- Commercial marine ports

Facet Model EB coalescer cartridges are for removing oil from water. Using a variety of media, these coalescer cartridges use the principle of mechanical impingement and preferential wetting to break any mechanical emulsion of oil and water. Using this force of gravity, the lighter liquid (oil) rises to the top of the vessel where it can be drawn off and the water flows to the bottom of the vessel and out the outlet connection.

DATA

MODEL NUMBER	OUTSIDE DIAMETER		INSIDE DIAMETER		NOMINAL LENGTH		FLOW RATE		MICRON RATING
	in	mm	in	mm	in	mm	gpm	lpm	
EB-11	6	152	3½	89	14½	360	10	38	50
EB-11CG	6	152	3½	89	11¼	280	10	38	50
EB-11CG2	6	152	3½	89	22½	554	20	76	50
EB-12	6	152	3½	89	14½	360	10	38	1
EB-12-1	6	152	3½	89	14½	360	10	38	5
EB-12CG1	6	152	3½	89	11¼	280	10	38	5
EB-12CG2	6	152	3½	89	22½	554	20	76	5

SS Series
Synthetic Separator Cartridges

Facet Model SS synthetic separator cartridges feature a specially developed hydrophobic synthetic media which offers all the permanent features of Teflon® screen, combined with ease of repair and lower cost. Synthetic mesh is wrapped around a treated, perforated metal shell, then adhesive bonded to gasketed metal end caps.

The distinctive Facet center tube design provides balanced flow of product (radially inward) throughout the cartridge. All metal components are treated to resist corrosion.

The synthetic mesh is designed for more effective water repelling characteristics assuring long, troublefree service. Recommended maximum operating temperature is 240°F (115°C). For compatibility in extreme operating conditions, other gasket, adhesive and metal materials are available.

Standard Design Features

- Superior water repelling characteristics over Teflon® and paper
- More resistant to surfactants
- Cleanable and reusable
- Maximum recommended operating temperature: 240°F (115°C)
- pH range from 5 to 9
- Designed for balanced flow through cartridge
- Flow direction: Outside to in

Materials

- Synthetic mesh 50 micron
- Treated metal components for corrosion protection
- Buna-N gaskets —other gasket, adhesive and metal materials are available on request

SS Series
Synthetic Separator Cartridges

DATA

MODEL NUMBER	OUTSIDE DIAMETER		NOMINAL LENGTH		INSIDE DIAMETER SEALING END		INSIDE DIAMETER MOUNTING END	
	in	mm	in	mm	in	mm	in	mm
SS318FA	3	76	18	460	17/32	13	2	51
SS324FA	3	76	24	610	17/32	13	2	51
SS330FA	3	76	30	760	17/32	13	2	51
SS412FC	4 1/8	105	11½	290	1 7/8	48	1 7/8	48
SS422FC	4 1/8	105	22½	570	1 7/8	48	1 7/8	48
SS432FC	4 1/8	105	31½	800	1 7/8	48	1 7/8	48
SS415FB	4½	114	15	380	17/32	13	3½	89
SS417FB	4½	114	17	430	17/32	13	3½	89
SS424FB	4½	114	24	610	17/32	13	3½	89
SS430FB	4½	114	30	760	17/32	13	3½	89
SS436FB	4½	114	36	910	17/32	13	3½	89
SS609FB	6	152	9	230	17/32	13	3½	89
SS609FF	6	152	9	230	3½	89	4½	114
SS611FD	6	152	11¼	290	3½	89	3½	89
SS611H	6	152	11¼	290	5½	140	5½	140
SS612FB	6	152	12	300	17/32	13	3½	89
SS612FF	6	152	12	300	3½	89	4½	114
SS614FD	6	152	14½	370	3½	89	3½	89
SS614H	6	152	14½	370	5½	140	5½	140
SS616FD	6	152	16¼	410	3½	89	3½	89
SS616H	6	152	16¼	410	5½	140	5½	140
SS618FB	6	152	18	460	17/32	13	3½	89
SS622FD	6	152	22¼	560	3½	89	3½	89
SS622H	6	152	22¼	560	5½	140	5½	140
SS624FB	6	152	24	610	17/32	13	3½	89
SS624FE	6	152	24	610	3½	89	4 1/8	105
SS624FF	6	152	24	610	3½	89	4½	114
SS629FD	6	152	28¾	730	3½	89	3½	89
SS629H	6	152	28¾	730	5½	140	5½	140
SS630FB	6	152	30	760	17/32	13	3½	89
SS630FD	6	152	30	760	3½	89	3½	89
SS630FE	6	152	30	760	3½	89	4 1/8	105
SS630FF	6	152	30	760	3½	89	4½	114
SS633FB	6	152	33¼	840	17/32	13	3½	89
SS633FD	6	152	33¼	840	3½	89	3½	89
SS633H	6	152	33¼	840	5½	140	5½	140
SS636FD	6	152	36	910	3½	89	3½	89
SS636FE	6	152	36	910	3½	89	4 1/8	105
SS636FF	6	152	36	910	3½	89	4½	114
SS640FD	6	152	40	1020	3½	89	3½	89
SS640FE	6	152	40	1020	3½	89	4 1/8	105
SS640FF	6	152	40	1020	3½	89	4½	114
SS644FD	6	152	44	1120	3½	89	3½	89
SS644FE	6	152	44	1120	3½	89	4 1/8	105
SS644FF	6	152	44	1120	3½	89	4½	114
SS648FD	6	152	48	1220	3½	89	3½	89
SS648FF	6	152	48	1220	3½	89	4½	114
SS656FD	6	152	56	1420	3½	89	3½	89
SS656FF	6	152	56	1420	3½	89	4½	114

SS Series 5
Synthetic Separator Cartridges
Qualified to EI 1581 6th Edition, Category C

Standard Design Features

- Cleanable and reusable
- Superior water barrier
- Maximum recommended operating temperature: 240°F (115°C)
- pH range from 5 to 9
- Designed for balanced flow through cartridge
- Flow direction: Outside to in

Materials

- Synthetic mesh
- Treated metal components for corrosion protection
- Buna-N gaskets —other gasket, adhesive and metal materials are available on request

Facet SS Series 5 synthetic separator cartridges feature a specially developed hydrophobic synthetic media which offers all the permanent features of Teflon® coated metal screen, with the ability to handle higher flow rates. Synthetic mesh is wrapped around a treated, perforated metal shell, then adhesive-bonded to gasketed metal end caps.
The distinctive Facet center tube design provides balanced flow of product (radially inward) throughout the cartridge. All metal components are treated to resist corrosion.

Facet filter water separators equipped with coalescer cartridges Facet CAA Series 5 and separator cartridges Facet SS Series 5 have been tested and fully qualified to meet the performance requirements of EI 1581, 6th Edition.

The synthetic mesh is designed for more effective water repelling characteristics assuring long, troublefree service. Recommended maximum operating temperature is 240°F (115°C). For compatibility in extreme operating conditions, other gasket, adhesive and metal materials are available.

SS Series 5
Synthetic Separator Cartridges
Qualified to EI 1581 6th Edition, Category C

DATA

MODEL NUMBER	OUTSIDE DIAMETER		NOMINAL LENGTH		INSIDE DIAMETER SEALING END		INSIDE DIAMETER MOUNTING END	
	in	mm	in	mm	in	mm	in	mm
SS318FA-5	3	76	18	460	17/32	13	2	51
SS324FA-5	3	76	24	610	17/32	13	2	51
SS330FA-5	3	76	30	760	17/32	13	2	51
SS412FC-5	4 1/8	105	11½	290	1 7/8	48	1 7/8	48
SS422FC-5	4 1/8	105	22½	570	1 7/8	48	1 7/8	48
SS432FC-5	4 1/8	105	31½	800	1 7/8	48	1 7/8	48
SS415FB-5	4½	114	15	380	17/32	13	3½	89
SS417FB-5	4½	114	17	430	17/32	13	3½	89
SS424FB-5	4½	114	24	610	17/32	13	3½	89
SS430FB-5	4½	114	30	760	17/32	13	3½	89
SS436FB-5	4½	114	36	910	17/32	13	3½	89
SS609FB-5	6	152	9	230	17/32	13	3½	89
SS609FF-5	6	152	9	230	3½	89	4½	114
SS611FD-5	6	152	11¼	290	3½	89	3½	89
SS611H-5	6	152	11¼	290	5½	140	5½	140
SS612FB-5	6	152	12	300	17/32	13	3½	89
SS612FF-5	6	152	12	300	3½	89	4½	114
SS614FD-5	6	152	14½	370	3½	89	3½	89
SS614H-5	6	152	14½	370	5½	140	5½	140
SS616FD-5	6	152	16¼	410	3½	89	3½	89
SS616H-5	6	152	16¼	410	5½	140	5½	140
SS618FB-5	6	152	18	460	17/32	13	3½	89
SS622FD-5	6	152	22¼	560	3½	89	3½	89
SS622H-5	6	152	22¼	560	5½	140	5½	140
SS624FB-5	6	152	24	610	17/32	13	3½	89
SS624FE-5	6	152	24	610	3½	89	4 1/8	105
SS624FF-5	6	152	24	610	3½	89	4½	114
SS629FD-5	6	152	28¾	730	3½	89	3½	89
SS629H-5	6	152	28¾	730	5½	140	5½	140
SS630FB-5	6	152	30	760	17/32	13	3½	89
SS630FD-5	6	152	30	760	3½	89	3½	89
SS630FE-5	6	152	30	760	3½	89	4 1/8	105
SS630FF-5	6	152	30	760	3½	89	4½	114
SS633FB-5	6	152	33¼	840	17/32	13	3½	89
SS633FD-5	6	152	33¼	840	3½	89	3½	89
SS633H-5	6	152	33¼	840	5½	140	5½	140
SS636FD-5	6	152	36	910	3½	89	3½	89
SS636FE-5	6	152	36	910	3½	89	4 1/8	105
SS636FF-5	6	152	36	910	3½	89	4½	114
SS640FD-5	6	152	40	1020	3½	89	3½	89
SS640FE-5	6	152	40	1020	3½	89	4 1/8	105
SS640FF-5	6	152	40	1020	3½	89	4½	114
SS644FD-5	6	152	44	1120	3½	89	3½	89
SS644FE-5	6	152	44	1120	3½	89	4 1/8	105
SS644FF-5	6	152	44	1120	3½	89	4½	114
SS648FD-5	6	152	48	1220	3½	89	3½	89
SS648FF-5	6	152	48	1220	3½	89	4½	114
SS656FD-5	6	152	56	1420	3½	89	3½	89
SS656FF-5	6	152	56	1420	3½	89	4½	114

ST Series
Teflon® Separator Cartridges

Standard Design Features

- Cleanable and reusable
- Maximum recommended operating temperature: 240°F (115°C)
- pH range from 5 to 9
- Designed for balanced flow through cartridge
- Flow direction: Outside to in

Materials

- Synthetic mesh 50 micron
- Treated metal components for corrosion protection
- Buna-N gaskets —other gasket, adhesive and metal materials are available on request

Facet manufactures cleanable and reusable separator cartridges of the highest quality in a variety of dimensional configurations. Teflon® coated screen is wrapped around a treated, perforated metal shell, lock seam folded and secured by metal clips, then adhesive bonded to gasketed metal end caps. The distinctive Facet center tube design provides balanced flow of product (radially inward) throught the cartridge.

All metal components are treated to resist corrosion. The screen is Teflon® coated for more effective water repelling characteristics assuring long, troublefree service. Recommended maximum operating temperature is 240°F (115°C). For compatibility in extreme operating conditions, other gasket, adhesive and metal materials are available.

ST Series
Teflon® Separator Cartridges

DATA

MODEL NUMBER	OUTSIDE DIAMETER		NOMINAL LENGTH		INSIDE DIAMETER SEALING END		INSIDE DIAMETER MOUNTING END	
	in	mm	in	mm	in	mm	in	mm
ST318FA	3	76	18	460	17/32	13	2	51
ST324FA	3	76	24	610	17/32	13	2	51
ST330FA	3	76	30	760	17/32	13	2	51
ST412FC	4 1/8	105	11 1/2	290	1 7/8	48	1 7/8	48
ST422FC	4 1/8	105	22 1/2	570	1 7/8	48	1 7/8	48
ST432FC	4 1/8	105	31 1/2	800	1 7/8	48	1 7/8	48
ST415FB	4 1/2	114	15	380	17/32	13	3 1/2	89
ST417FB	4 1/2	114	17	430	17/32	13	3 1/2	89
ST424FB	4 1/2	114	24	610	17/32	13	3 1/2	89
ST430FB	4 1/2	114	30	760	17/32	13	3 1/2	89
ST436FB	4 1/2	114	36	910	17/32	13	3 1/2	89
ST609FB	6	152	9	230	17/32	13	3 1/2	89
ST609FF	6	152	9	230	3 1/2	89	4 1/2	114
ST611FD	6	152	11 1/4	290	3 1/2	89	3 1/2	89
ST611H	6	152	11 1/4	290	5 1/2	140	5 1/2	140
ST612FB	6	152	12	300	17/32	13	3 1/2	89
ST612FF	6	152	12	300	3 1/2	89	4 1/2	114
ST614FD	6	152	14 1/2	370	3 1/2	89	3 1/2	89
ST614H	6	152	14 1/2	370	5 1/2	140	5 1/2	140
ST616FD	6	152	16 1/4	410	3 1/2	89	3 1/2	89
ST616H	6	152	16 1/4	410	5 1/2	140	5 1/2	140
ST618FB	6	152	18	460	17/32	13	3 1/2	89
ST622FD	6	152	22 1/4	560	3 1/2	89	3 1/2	89
ST622H	6	152	22 1/4	560	5 1/2	140	5 1/2	140
ST624FB	6	152	24	610	17/32	13	3 1/2	89
ST624FE	6	152	24	610	3 1/2	89	4 1/8	105
ST624FF	6	152	24	610	3 1/2	89	4 1/2	114
ST629FD	6	152	28 3/4	730	3 1/2	89	3 1/2	89
ST629H	6	152	28 3/4	730	5 1/2	140	5 1/2	140
ST630FB	6	152	30	760	17/32	13	3 1/2	89
ST630FD	6	152	30	760	3 1/2	89	3 1/2	89
ST630FE	6	152	30	760	3 1/2	89	4 1/8	105
ST630FF	6	152	30	760	3 1/2	89	4 1/2	114
ST633FB	6	152	33 1/4	840	17/32	13	3 1/2	89
ST633FD	6	152	33 1/4	840	3 1/2	89	3 1/2	89
ST633H	6	152	33 1/4	840	5 1/2	140	5 1/2	140
ST636FD	6	152	36	910	3 1/2	89	3 1/2	89
ST636FE	6	152	36	910	3 1/2	89	4 1/8	105
ST636FF	6	152	36	910	3 1/2	89	4 1/2	114
ST640FD	6	152	40	1020	3 1/2	89	3 1/2	89
ST640FE	6	152	40	1020	3 1/2	89	4 1/8	105
ST640FF	6	152	40	1020	3 1/2	89	4 1/2	114
ST644FD	6	152	44	1120	3 1/2	89	3 1/2	89
ST644FE	6	152	44	1120	3 1/2	89	4 1/8	105
ST644FF	6	152	44	1120	3 1/2	89	4 1/2	114
ST648FD	6	152	48	1220	3 1/2	89	3 1/2	89
ST648FF	6	152	48	1220	3 1/2	89	4 1/2	114
ST656FD	6	152	56	1420	3 1/2	89	3 1/2	89
ST656FF	6	152	56	1420	3 1/2	89	4 1/2	114

ST Series 5
Teflon® Separator Cartridges
Qualified to EI 1581 6th Edition, Category C

Standard Design Features

- Cleanable and reusable
- Maximum recommended operating temperature: 240°F (115°C)
- pH range from 5 to 9
- Designed for balanced flow through cartridge
- Flow direction: Outside to in

Materials

- Synthetic mesh 50 micron
- Treated metal components for corrosion protection
- Buna-N gaskets —other gasket, adhesive and metal materials are available on request

Facet manufactures cleanable and reusable separator cartridges of the highest quality in a variety of dimensional configurations. Teflon® coated screen is wrapped around a treated, perforated metal shell, lock seam folded and secured by metal clips, then adhesive bonded to gasketed metal end caps. The distinctive Facet center tube design provides balanced flow of product (radially inward) throught the cartridge.

All metal components are treated to resist corrosion. The screen is Teflon® coated for more effective water repelling characteristics assuring long, troublefree service. Recommended maximum operating temperature is 240°F (115°C). For compatibility in extreme operating conditions, other gasket, adhesive and metal materials are available.

ST Series 5
Teflon® Separator Cartridges
Qualified to EI 1581 6th Edition, Category C

DATA

MODEL NUMBER	OUTSIDE DIAMETER		NOMINAL LENGTH		INSIDE DIAMETER SEALING END		INSIDE DIAMETER MOUNTING END	
	in	mm	in	mm	in	mm	in	mm
ST318FA-5	3	76	18	460	17/32	13	2	51
ST324FA-5	3	76	24	610	17/32	13	2	51
ST330FA-5	3	76	30	760	17/32	13	2	51
ST412FC-5	4 1/8	105	11½	290	1 7/8	48	1 7/8	48
ST422FC-5	4 1/8	105	22½	570	1 7/8	48	1 7/8	48
ST432FC-5	4 1/8	105	31½	800	1 7/8	48	1 7/8	48
ST415FB-5	4½	114	15	380	17/32	13	3½	89
ST417FB-5	4½	114	17	430	17/32	13	3½	89
ST424FB-5	4½	114	24	610	17/32	13	3½	89
ST430FB-5	4½	114	30	760	17/32	13	3½	89
ST436FB-5	4½	114	36	910	17/32	13	3½	89
ST609FB-5	6	152	9	230	17/32	13	3½	89
ST609FF-5	6	152	9	230	3½	89	4½	114
ST611FD-5	6	152	11¼	290	3½	89	3½	89
ST611H-5	6	152	11¼	290	5½	140	5½	140
ST612FB-5	6	152	12	300	17/32	13	3½	89
ST612FF-5	6	152	12	300	3½	89	4½	114
ST614FD-5	6	152	14½	370	3½	89	3½	89
ST614H-5	6	152	14½	370	5½	140	5½	140
ST616FD-5	6	152	16¼	410	3½	89	3½	89
ST616H-5	6	152	16¼	410	5½	140	5½	140
ST618FB-5	6	152	18	460	17/32	13	3½	89
ST622FD-5	6	152	22¼	560	3½	89	3½	89
ST622H-5	6	152	22¼	560	5½	140	5½	140
ST624FB-5	6	152	24	610	17/32	13	3½	89
ST624FE-5	6	152	24	610	3½	89	4 1/8	105
ST624FF-5	6	152	24	610	3½	89	4½	114
ST629FD-5	6	152	28¾	730	3½	89	3½	89
ST629H-5	6	152	28¾	730	5½	140	5½	140
ST630FB-5	6	152	30	760	17/32	13	3½	89
ST630FD-5	6	152	30	760	3½	89	3½	89
ST630FE-5	6	152	30	760	3½	89	4 1/8	105
ST630FF-5	6	152	30	760	3½	89	4½	114
ST633FB-5	6	152	33¼	840	17/32	13	3½	89
ST633FD-5	6	152	33¼	840	3½	89	3½	89
ST633H-5	6	152	33¼	840	5½	140	5½	140
ST636FD-5	6	152	36	910	3½	89	3½	89
ST636FE-5	6	152	36	910	3½	89	4 1/8	105
ST636FF-5	6	152	36	910	3½	89	4½	114
ST640FD-5	6	152	40	1020	3½	89	3½	89
ST640FE-5	6	152	40	1020	3½	89	4 1/8	105
ST640FF-5	6	152	40	1020	3½	89	4½	114
ST644FD-5	6	152	44	1120	3½	89	3½	89
ST644FE-5	6	152	44	1120	3½	89	4 1/8	105
ST644FF-5	6	152	44	1120	3½	89	4½	114
ST648FD-5	6	152	48	1220	3½	89	3½	89
ST648FF-5	6	152	48	1220	3½	89	4½	114
ST656FD-5	6	152	56	1420	3½	89	3½	89
ST656FF-5	6	152	56	1420	3½	89	4½	114

M Series
Filter Housings

Facet filter housings are specifically designed to remove solid particles such as rust, dirt, pipe scale, sand and metal from fuel. They are commonly located ahead of clay treaters and coalescer separators to protect and prolong cartridge life. A single pass through the filter allows clean product to flow downstream.

Facet filter housings will continuously remove solids from fuel when used with Facet standard single, double or triple-length FA, M OR CIF Series high efficiency filter cartridges. Housings are designed for easy servicing and low maintenance. All are built to ASME Code, Section VIII, with many standard and optional accessories and connections available to facilitate individual installation requirements. Facet filters provide a complete system to meet industry standards and levels of effluent purity required by commercial airlines, major oil companies and governments, worldwide.

M Series filter housings use any of Facet's high efficiency filter cartridges. A single pass of product through the system removes solids such as rust, dirt, scale, granules and other particles commonly found in liquid process streams.

M Series filter housings are available in three styles and in several standard sizes to accommodate specific flow and filtration requirements. They are designed with no internal moving parts to provide easy service and reduced maintenance costs. Each housing is manufactured using quality materials and workmanship to give long-lasting, dependable service.

M Series filter housings can be fitted with either multiple single-length cartridges, stacked 1, 2 or 3 high or their double-length or triple-length equivalents.

Standard Housing Design

- EI 1596 Design & Construction or applicable design code
- Body: Welded carbon steel construction other materials available on request
- ASME Code, Section VIII construction, stamped and certified
- Designed for 150 psi @ 250°F—higher pressure and temperature ratings available on request
- Head closures: Style A —thru-bolt; Styles B and C —swing bolt
- Buna-N closure gasket —other materials available on request
- Rod mount cartridge hardware
- Knife edge cartridge mounting seals
- Headlift furnished on 20" (508 mm) and larger
- Inlet and outlet permanently marked
- Exterior: Prime coated
- Interior: Epoxy coated (EI 1541)

Standard Connections

- Inlet and outlet: Style A —3000# NPT; Style B and C —150# RF (ANSI) flanged
- Side and bottom drain: 3000# NPT
- Vent and relief valve: ¾" 3000# NPT
- Pressure gauge: ¼" 3000# NPT

Options

- Automatic air eliminator
- Automatic air eliminator check valve
- Differential pressure gauge
- Pressure relief valve
- Manual drain valve

M Series
Filter Housings

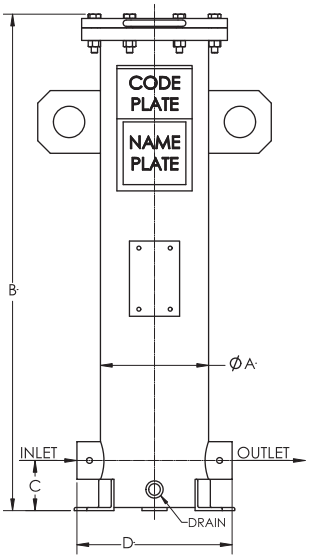

STYLE A

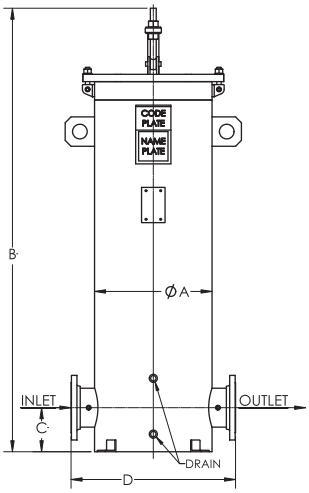

STYLE B

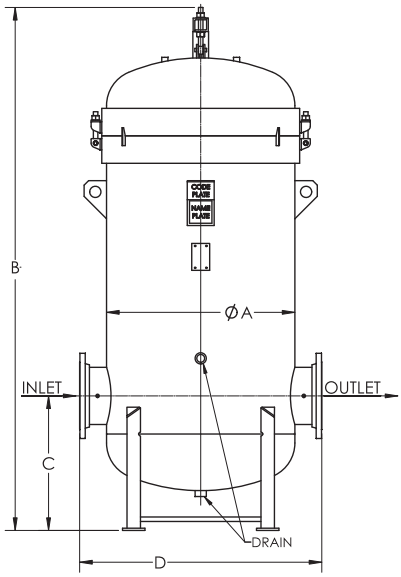

STYLE C

DATA

MODEL NUMBER	MAXIMUM FLOW RATE		CONNECTIONS						ANCHOR BOLT PLAN					WEIGHT WITH CARTRIDGES	
			INLET/OUTLET		SIDE DRAIN		BOTTOM DRAIN		BOLT HOLE DIAMETER		BOLT CIRCLE		NO. OF BOLT HOLES		
	gpm	lpm	in	mm	in	mm	in	mm	mm	in	mm	in		lbs	kg
1M-114	66	250	2	51	N/A	N/A	¾	19	⅞	22	11⅝	295	3	110	50
1M-214	133	503	2	51	N/A	N/A	¾	19	⅞	22	11⅝	295	3	140	64
1M-314	200	757	2	51	N/A	N/A	¾	19	⅞	22	11⅝	295	3	160	73
2M-314	400	1514	4	102	¾	19	¾	19	⅞	22	17	432	4	450	204
3M-314	600	2271	4	102	¾	19	¾	19	⅞	22	19	483	4	525	238
4M-314	800	3028	6	152	¾	19	¾	19	⅞	22	21	533	4	650	295
6M-314	1200	4542	6	152	¾	19	¾	19	⅞	22	23	584	4	775	352
11M-314	2200	8328	8	203	1½	38	1	25	⅞	22	24⅝	625	4	1225	556
18M-314	3600	13627	10	254	1½	38	1	25	⅞	22	31⅜	797	4	1950	885
27M-314	5400	20441	12	305	1½	38	1½	38	1	25	39⅜	1000	4	2700	1225

Other sizes available on request.

DIMENSIONS

MODEL NUMBER	DIMENSIONS								HOUSING LIQUID VOLUME		HOUSING TYPE
	A		B		C		D				
	in	mm	in	mm	in	mm	in	mm	gal	ltr	
1M-114	8⅝	219	24¼	616	4	102	12⅜	314	5	19	Style A - Flat
1M-214*	8⅝	219	39½	1003	4	102	12⅜	314	9	34	Style A - Flat
1M-314*	8⅝	219	54½	1378	4	102	12⅜	314	12	45	Style A - Flat
2M-314*	14	355	72¾	1848	6	152	22	559	36	136	Style B - Flat
3M-314*	16	406	72¾	1848	6	152	24	610	48	182	Style B - Flat
4M-314*	18	457	75¼	1911	7½	191	26	660	63	238	Style B - Flat
6M-314*	20	508	75½	1918	7½	191	28	711	78	295	Style B - Flat
11M-314	28	711	103¼	2623	24	610	36	914	205	776	Style C - Dished
18M-314	34	864	109½	2781	27	686	46	1168	315	1192	Style C - Dished
27M-314	42	1067	116¾	2965	30	762	54	1371	520	1968	Style C - Dished

NOTES:
1. Cartridges are selected separately to fit specific application requirements.
2. Multiple stack cartridges should be replaced with one single-length equivalent. For example: 1M-214 = 1M-128 or 6M-314 = 6M-143, etc.
3. Consult factory for flow rates when using EI 1590 Qualified Elements.

All dimensions, weights and volumes are approximate and are for estimating purposes only.
* These models do not comply with EI 1596 specs. Please contact your nearest Facet location for further information.

M Series
High Efficiency Pleated Paper Filter Cartridges

Facet M Series high efficiency pleated paper filter cartridges are designed to effectively remove solid contaminants such as rust, dirt, scale, granular and other types of solids. These cartridges are constructed to meet the demanding requirements of the marine filter market.

Media with high efficiencies throughout the life of the cartridges are available in ratings of 0.5 to 75 microns. The filtration of potable liquids is not recommended with this series of filter cartridges.

Facet also offers a MPM Series multimedia, pleated extended area, depth filter cartridge for removing colloidal, slimy, or sludge type solids, as well as extremely fine solids, from process streams. They are available in 0.5, 1, and 2 micron ratings. The combination of multimedia pleated paper fiberglass sheets provides a unique depth filter with a large surface area.

Our pleated paper filter media is made from a variety of natural and synthetic fibers. The fibers are bonded using various resins to provide excellent filtration and solids holding characteristics.

Benefits

- Higher efficiency and longer service life = lower operating costs
- High efficiency cartridge provides superior solids holding capacity
- New spirally wound core reduces cartridge weight resulting in lower freight costs
- All metal components are epoxy powder coated to protect against corrosion
- Gaskets are Buna-N -other materials available upon request
- Available in both self-centering rod mount and screw base
- Available in numerous micron ratings: 0.5, 1, 2, 5, 10, 15, 25, 40, and 75
- Flow direction: Outside to In
- Design collapse pressure: 75 psid (5.25 kg/cm^2)
- Initial differential pressure: 2 psi (014 kg/cm^2) or less

Applications

- Fuels
- Rolling Oils
- Insulating Oils
- Paints
- Liquid Plastics
- Waxes
- Lube Oils
- Coolants
- Industrial Water
- Varnishes
- Base Oils
- Solvents (Stoddard Based)
- Petroleum Based and Synthetic Hydraulic Fluids

M Series
High Efficiency Pleated Paper Filter Cartridges

PERFORMANCE SPECIFICATION

SERIES	NOMINAL REMOVAL MICRON								
	0.5	1	2	5	10	15	25	40	75
MPM	•	•	•						
MP	•	•	•	•	•	•	•	•	•

MATERIALS

Filter media options:

0.5 - 2 µm: Multimedia Pleated paper & Fiberglass
5 - 75 µm: Resin Impregnated Pleated Paper

Gasket Materials:

Standard: Buna-N
Optional: Other materials available upon request

Components:

Center Core: Epoxy Powder Coated Spiral Wound Steel
End caps: Epoxy Powder Coated Steel
Outer Body: Perforated Oil Board

Adhesives: Thermoset PVC

FILTER SIZES AND DIMENSIONS

SERIES	DIMENSIONS					
	OD		ID		LENGTH	
	in	mm	in	mm	in	mm
MPMµL	6	152	3 ½	89	14 ½	370
MPµ	6	152	3 ½	89	14 ½	370
MPµL	6	152	3 ½	89	14 ½	370
MPMµLX2	6	152	3 ½	89	28 ¾	730
MPµX2	6	152	3 ½	89	28 ¾	730
MPµLX2	6	152	3 ½	89	28 ¾	730
MPMµLX3	6	152	3 ½	89	43 ¼	1090
MPµX3	6	152	3 ½	89	43 ¼	1090
MPµLX3	6	152	3 ½	89	43 ¼	1090
MPMµLX4	6	152	3 ½	89	57 ¾	1465

µ = Micron Rating

Note: The dimensions are nominal. These are standard sizes. Many other sizes and combinations are available. Please call us for special sizes.

TEMPERATURE / COMPATIBILITY GUIDE

MEDIA	MAXIMUM TEMPERATURE	pH RANGE	PETROLEUM PRODUCTS	CHEMICALS	AQUEOUS SOLUTIONS
Multimedia	240 °F	5 - 9	Excellent	Good	Fair
Pleated Paper	240 °F	5 - 9	Excellent	Good	Fair

CARTRIDGE ORDERING INFORMATION

SERIES	MICRON RATING	OUTER BODY DESCRIPTION	LENGTH	SPECIAL FEATURES
MPM	0.5	L	X2	
MP	5		X3	SB
	0.5, 1, 2, 5, 10, 15, 25, 40, 75	L = Outer Body No designation = No outer body	No designation = 14 ½” X2 = 28 ¾” X3 = 43 ¼” X4 = 57 ¾”	SB = Screw Base V = Viton Gasket J = Non Asbestos Gasket N = Neoprene Gasket

MP SERIES
SINGLE-LENGTH (14 ½") CARTRIDGE FLOW RATES AND EFFECTIVE FILTRATION SURFACE AREA

Micron		0.5		1		2		5		10		15		25		40		75	
Viscosity		Flow	ΔP	Flow	ΔP	Flow	ΔP	Flow	ΔP	Flow	ΔP	Flow	ΔP	Flow	ΔP	Flow	ΔP	Flow	ΔP
ssu	cs	gpm	psi	gpm	psi	gpm	psi	gpm	psi	gpm	psi	gpm	psi	gpm	psi	gpm	psi	gpm	psi
29	1	66	.50	66	.28	66	.28	66	.13	66	.08	66	.04	66	.03	66	.02	66	.01
32	2	66	1.0	66	.57	66	.57	66	.26	66	.18	66	.09	66	.06	66	.04	66	.02
36	3	66	1.5	66	.86	66	.86	66	.40	66	.27	66	.14	66	.09	66	.07	66	.04
43	5	52	2.0	66	1.4	66	1.4	66	.66	66	.45	66	.23	66	.15	66	.11	66	.07
52	8	32	2.0	57	2.0	57	2.0	66	1.1	66	.73	66	.37	66	.23	66	.18	66	.11
58	10	26	2.0	46	2.0	46	2.0	66	1.3	66	.89	66	.47	66	.29	66	.22	66	.13
98	20	13	2.0	23	2.0	23	2.0	50	2.0	58	1.4	66	.93	66	.58	66	.44	66	.26
140	30	8	2.0	15	2.0	15	2.0	33	2.0	50	1.7	66	1.4	66	.87	66	.66	66	.40
190	40	6	2.0	11	2.0	11	2.0	25	2.0	45	2.0	66	1.9	66	1.2	66	.88	66	.53
230	50	5	2.0	9	2.0	9	2.0	20	2.0	38	2.0	56	2.0	66	1.4	66	1.1	66	.66
342	75	3	2.0	6	2.0	6	2.0	13	2.0	25	2.0	38	2.0	60	2.0	66	1.6	66	1.0
455	100	2	2.0	4	2.0	4	2.0	10	2.0	17	2.0	28	2.0	45	2.0	60	2.0	66	1.3
910	200	1	2.0	2	2.0	2	2.0	5	2.0	8	2.0	14	2.0	22	2.0	30	2.0	50	2.0
1365	300	0.9	2.0	1	2.0	1	2.0	3	2.0	6	2.0	9	2.0	15	2.0	20	2.0	33	2.0
1818	400	0.6	2.0	1	2.0	1	2.0	2	2.0	4	2.0	7	2.0	11	2.0	15	2.0	25	2.0
2273	500	0.5	2.0	0.9	2.0	0.9	2.0	2	2.0	3	2.0	5	2.0	9	2.0	12	2.0	20	2.0
Surface Area Square feet		**8.6**		**20.2**		**23.1**		**23.1**		**23.1**		**23.1**		**23.1**		**23.1**		**23.1**	

To determine the double, triple and quadruple-length cartridge flow rates or surface areas, multiply the single-length result by 2, 3 or 4 respectively.

MPM SERIES FLOW RATES

Model		MPM0.5		MPM2	
Micron		0.5		2	
Viscosity		Flow	ΔP	Flow	ΔP
ssu	cs	gpm	psi	gpm	psi
29	1	66	1.4	66	.73
32	2	47	2.0	66	1.4
36	3	31	2.0	60	2.0
43	5	19	2.0	36	2.0
52	8	12	2.0	23	2.0
58	10	9	2.0	18	2.0
98	20	5	2.0	9	2.0
140	30	3	2.0	6	2.0
190	40	2	2.0	5	2.0
230	50	2	2.0	4	2.0
342	75	1	2.0	2	2.0
455	100	0.9	2.0	2	2.0
910	200	0.5	2.0	0.9	2.0
1365	300	0.3	2.0	0.6	2.0
1818	400	0.2	2.0	0.4	2.0
2273	500	0.2	2.0	0.3	2.0

Flow rates are expressed in US Gallons per Minute (GPM).
GPM x 3.785 = Liters per Minute (LPM)

Differential pressure is listed in Pound per Square Inch (PSI).
PSI x .07 = Kilograms per Centimeter Squared (kg/cm^2).

MG Series
Glass Fiber Filter Cartridges

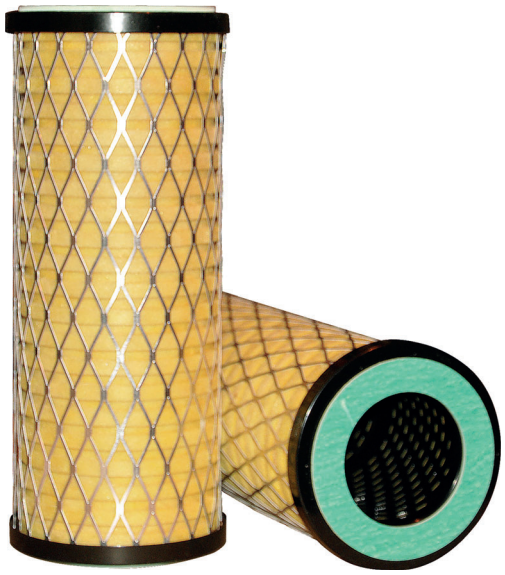

Facet's Model MG glass fiber depth filter cartridges are for removing colloidal, slimy or sludge type solids 10 micron and larger or where compatibility problems exist with cellulose media.

Our pleated paper filter media is made from a variety of natural and synthetic fibers. The fibers are bonded using various resins to provide excellent filtration and solids holding characteristics.

The cartridges are 6" (152 mm) OD, 3 ½" (89 mm) ID and 14 ½" (368 mm) long.

Standard Design Features

- Maximum recommended operating temperature: 300°F (148°C)
- Maximum differential pressure: 75 psi (5.25 kg/cm²)
- Flow direction: Outside to in
- pH range from 1 to 9

Materials

- All metal components coated to protect against corrosion on model MG10
- All metal components stainless steel on model MG10S
- Gaskets are CAF (non-asbestos)
- Metal outer wrap

Housing Selection

- Model 1MCM housings -non-code design for low flow rates
- SuperFlex™ AA housings -ASME Code design for high flow rates
- Model M housings -ASME Code design for high flow rates
- Model HF Housings

Model		MG10		MG10S	
Micron		10		10	
Viscosity		Flow	ΔP	Flow	ΔP
ssu	cs	gpm	psi	gpm	psi
29	1	75	.45	75	.45
32	2	75	1.0	75	1.0
36	3	75	1.4	75	1.4
43	5	68	2.0	75	2.0
52	8	42	2.0	42	2.0
58	10	34	2.0	34	2.0
98	20	17	2.0	17	2.0
140	30	11.3	2.0	11.3	2.0
190	40	8.5	2.0	8.5	2.0
230	50	6.8	2.0	6.8	2.0
342	75	4.5	2.0	4.5	2.0
455	100	3.4	2.0	3.4	2.0
910	200	1.7	2.0	1.7	2.0
1365	300	1.1	2.0	1.1	2.0
1818	400	.85	2.0	.85	2.0
2273	500	.68	2.0	.68	2.0

BS Series
Basket Strainers

BS Series filter housings use a Facet's stainless steel high efficiency basket strainer. A single pass of product through the system removes solids such as rust, dirt, scale, granules and other particles commonly found in liquid process streams.

Facet BS Series filter housings are available in several standard sizes to accommodate specific flow and filtration requirements. They are designed with no internal moving parts to provide easy service and reduced maintenance costs. Each housing is manufactured using quality materials and workmanship to give long-lasting, dependable service.

These housings are fitted with a cleanable basket made of stainless steel preforated plate with stainless steel mesh.

Standard Design Features

- Body: Welded carbon steel construction, other materials available on request
- ASME Code, Section VIII construction, stamped and certified or "CE" marked
- Designed for 150 psi (10.5 kg/cm²) at 240°F (115°C); higher pressure and temperature ratings available on request
- Head closures: swing bolt closure
- Head gasket: Buna-N O-ring, other materials available on request
- Inlet and outlet permanently marked
- Exterior: Primer coated
- Interior: Epoxy coated
- Headlift furnished on 20" (508 mm) and larger

Standard Connections

- Inlet and outlet: 150# RF (ANSI) flanged
- Side and bottom drain: 3000# NPT
- Vent and relief valve: ¾" 3000# NPT
- Pressure gauge: ¾" 3000# NPT

Options

- Air eliminator
- Differential pressure gauge
- Pressure relief valve
- Manual drain valve
- Stainless steel wedge wire basket
- Thru bolts closure

BS Series
Basket Strainers

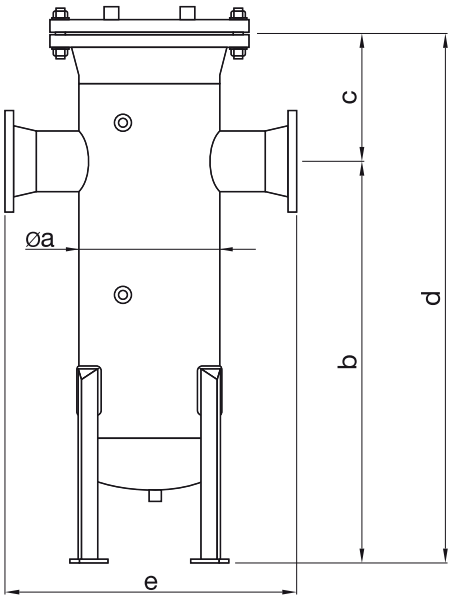

DATA

MODEL NUMBER	øa		b		c		d		e	
	in	mm	in	mm	in	mm	in	mm	in	mm
BS-2	5½	140	11 13/16	300	5½	140	17¼	438	9¾	248
BS-3	6 5/8	168	16 11/32	415	6 13/16	175	23¼	590	16¾	425
BS-4	8 5/8	219	26¾	680	9½	241	36	914	20	508
BS-6	10¾	273	41 11/32	1050	10½	270	52	1320	22¾	580
BS-8	12¾	324	44 7/8	1140	13	330	57¾	1467	27	686
BS-10	14	356	51 1/5	1300	13¾	350	65	1651	28¼	720
BS-12	18	458	49¼	1251	15¼	389	64½	1638	33¼	845
BS-14	18	458	63	1620	150¾	400	79½	2020	34¼	870
BS-16	20	508	71½	1816	19¾	501	91	2311	36	914
BS-20	24	610	74¾	1899	23½	598	98½	2502	41¼	1060
BS-24	28	711	110¼	2800	31½	800	141¾	3600	48	1220

Other sizes available on request.

SCF Series
Self-Cleaning Filters

The Facet self-cleaning filters, back-washing type, allow the continuous filtration of different fluids with a heavy solid contamination loading.

The functioning is fully automatic since the filtering elements are periodically cleaned by means of an automatic and sequential backwashing of the filtering elements themselves.

The Facet filters SCF series have proven their efficiency in the most various applications of the industry and they are particularly suitable for the filtration of:

- Hydrocarbons and process fluids
- Coolants
- Cooling, sea and well water
- Water for irrigation and fire systems

Operation Principle

The Facet filters SCF series are made of a cylindrical body; here inside there are one or more concentric circles of vertical filtering elements, fitted to a plate.

Below this plate there is a back-washing arm activated by a drive unit and connected to the automatic discharge valve. The fluid enters in the filter and flows trough the filtering elements, which in turn retain the solid particles. In this phase the filter runs statically: no back washing is being performed.

When, due to the progressive clogging of the filtering elements, a preset differential pressure drop is reached, the logic in the control panel starts the back-washing arm rotation and opens the automatic drain valve.

Each element is then connected to the arm, which is under atmospheric pressure. The differential pressure between the clean chamber and the discharge drain generates a backflow of filtered fluid. All the impurities are removed from the inside part of the filtering elements and discharged to the drain circuit.

SCF Series
Self-Cleaning Filters

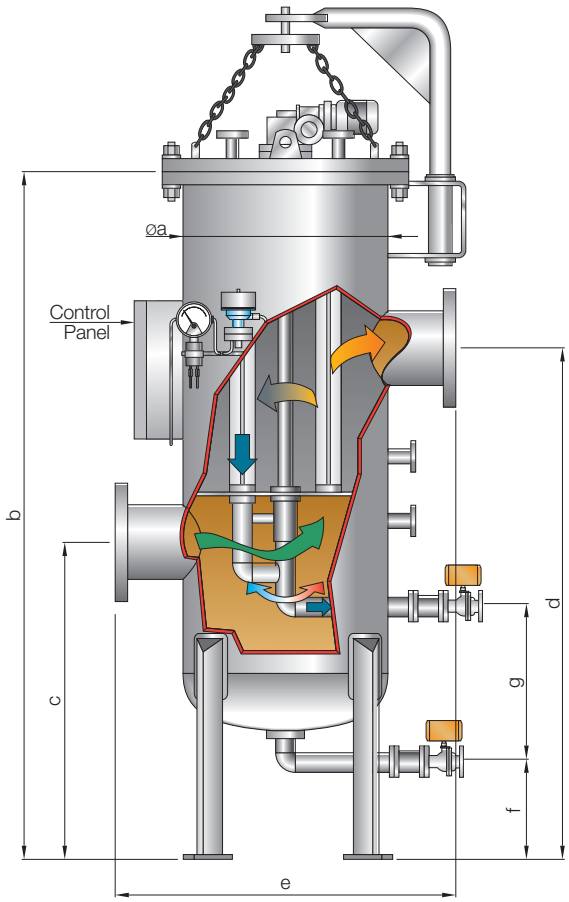

MODEL	a		b		c		d		e		f		g	
	in	mm	in	mm	in	mm	in	mm	in	mm	in	mm	in	mm
SCF-12	16	406	50¾	1290	23⅝	600	34¾	880	31½	800	6	152	14¼	362
SCF-22	18	457	52	1330	24¼	620	36¼	920	33½	850	6	152	14¼	362
SCF-27	20	508	53½	1360	25½	650	37¼	950	35½	900	6	152	15	381
SCF-32	22	559	56¾	1440	26¾	680	40½	1030	37¼	950	6	152	16½	419
SCF-42	24	610	57¾	1460	27½	700	41¼	1050	39½	1000	6	152	17¼	438
SCF-52	26	660	60¼	1530	28¼	720	44	1120	41¼	1050	6	152	18	457
SCF-60	28	711	61½	1560	29½	750	45¼	1150	43¼	1100	6	152	19	482

HFG Series
Horizontal Fuel-Gard® Filter Monitor Housings

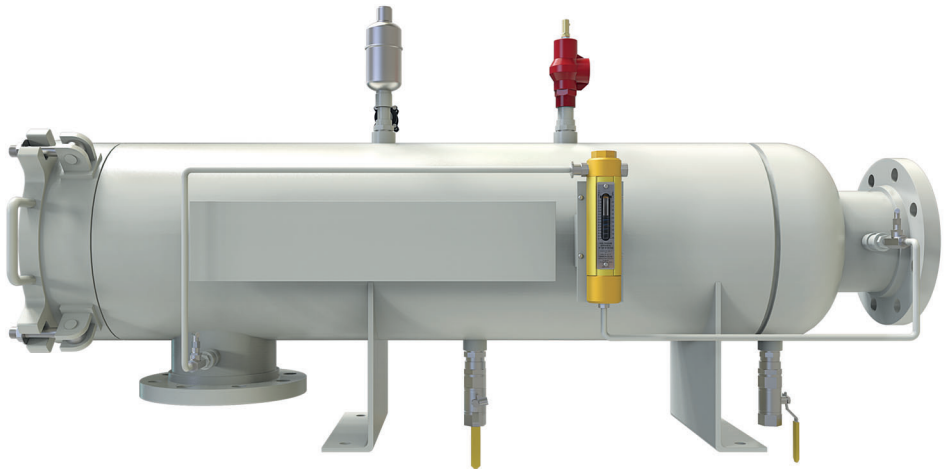

The Facet HFG Series Horizontal Fuel-Gard® monitor housings, equipped with Facet's FG Series monitor cartridges, continually check the entire flow of fuel, not just mere samples, for water or solids contamination. By performing three jobs, the FG Series monitors assure clean, dry fuel. They absorb free and emulsified water, remove ultra-fine solids, and shut down system flow when hit with a localized slug of water. They are designed to flow from the outside to inside at a rate of 1 gallon (3.79 liters) per inch of length.

Facet's Fuel-Gard® monitor housings are built to ASME Code, constructed of carbon steel and designated for maximum working pressure of 150 psi. They are furnished with FG Series monitor cartridges that meet and exceed the latest edition of EI Specification 1583 Aviation Fuel Filter Monitors with Absorbent Type Elements.

Standard Housing Design

- EI 1596 Design & Construction
- Welded carbon steel construction —other materials available on request
- ASME Code, Section VIII construction, stamped and certified
- Maximum working pressure: 150 psi
- Swing bolt closures on 8⅝" (219 mm.) OD housings and larger
- Buna-N closure o-ring—other materials available
- Exterior: Prime coated
- Interior: Epoxy coated (EI 1541)
- Spider plate

Standard Connections

- Flanged inlet and outlet connections
- Drain connection: ¾" NPT
- Vent and relief valve connections: ¾" NPT
- Differential pressure gauge connections: ¾" NPT

Options

- Automatic air eliminator
- Automatic air eliminator check valve
- Pressure relief valve
- Differential pressure gauge
- Sampling probes
- Manual drain valve
- Victaulic inlet and outlet connections
- Interlock Device

HFG Series
Horizontal Fuel-Gard® Filter Monitor Housings

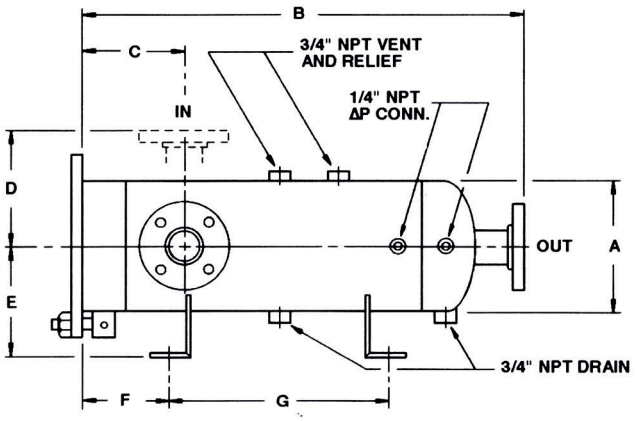

DATA

MODEL NUMBER	FLOW RATE		REQUIRED CARTRIDGES[1]		LIQUID VOLUME		DRY WEIGHT		HOUSING TYPE
	gal	ltr	qty	model	gal	ltr	lbs	kg	
HFG-C-5210	50	189	5	FG-710-6	3	11	235	107	FLAT
HFG-C-5220	100	379	5	FG-720-6	4	15	250	113	FLAT
HFG-C-5230	150	568	5	FG-730-6	5.5	21	265	120	FLAT
HFG-C-10220	200	757	10	FG-720-6	7.5	28	310	141	FLAT
HGF-C-10230	300	1136	10	FG-730-6	10	38	350	159	FLAT
HFG-C-70230	600	2271	20	FG-730-6	20	76	385	175	FLAT
HFG-C-30230	900	3406	30	FG-730-6	30	114	450	204	FLAT
HFG-C-40230	1200	4542	40	FG-730-6	40	151	490	222	FLAT

DIMENSIONS

MODEL NUMBER	INLET/OUTLET DIAMETER		A		B		C		D		E		F		G	
	in	mm	in	mm	in	mm	in	mm	in	mm	in	mm	in	mm	in	mm
HFG-C-5210	2	51	6⅝	168	28	711	7	178	7	178	6¼	159	6	152	13	330
HFG-C-5220	2	51	6⅝	168	38	965	7	178	7	178	6¼	159	6	152	23	584
HFG-C-5230	2	51	6⅝	168	48	1219	7	178	7	178	6¼	159	6	152	33	838
HFG-C-10220	3	76	8⅝	219	40	1016	8	203	8	203	7¼	184	6	152	24	610
HGF-C-10230	4	102	8⅝	219	52	1321	9	229	8	203	7¼	184	6	152	36	914
HFG-C-70230	6	152	12¾	324	55	1397	10	254	10	254	9½	241	6	152	38	965
HFG-C-30230	6	152	14	356	55	1397	10	254	11	279	10	254	6	152	38	965
HFG-C-40230	6	152	16	406	56	1422	10	254	12	305	11	279	6	152	38	965

All dimensions, weights and volumes are approximate and are for estimating purposes only.

WARNING: MONITOR CARTRIDGES SHOULD NEVER BE USED WITH FUELS CONTAINING ANTI-ICING ADDITIVES SUCH AS FSII, PRIST AND DI-EGME. THIS INCLUDES PRE-MIXED AND MILITARY FUELS CONTAINING THESE ADDITIVES. THE USE OF MONITOR CARTRIDGES WITH FUELS CONTAINING ANTI-ICING ADDITIVES MAY RESULT IN (1) A FAILURE OF THE MONITOR CARTRIDGE AND/OR (2) MIGRATION OF FILTRATION MEDIA INTO THE FUEL STREAM, EITHER OF WHICH COULD POTENTIALLY CAUSE DAMAGE TO OR SUDDEN FAILURE OF THE CORRESPONDING ENGINE. THE SUPPLIER SHALL NOT BE LIABLE IN ANY RESPECT FOR ANY DAMAGE OR LOSS THAT ARISES FROM THE USE OF MONITOR CARTRIDGES WITH FUELS CONTAINING ANTI-ICING ADDITIVES. SUCH USE IS ENTIRELY AT THE USER'S RISK.

FG Series
Fuel-Gard® EI 1583 Monitor Cartridges
2" OD - Outside/Inside Flow

The Facet 2" (51 mm.) nominal outside diameter FG Series Fuel-Gard® monitor cartridges perform three jobs—they absorb free and emulsified water, remove ultra-fine solids and shut down system flow when hit with a localized slug of water, giving you clean, dry fuel. The FG Series Fuel-Gard® monitor cartridges are designed to flow from the outside to inside at a rate of 1 gallon (3.79 liters) per inch of length.

Fuel-Gard® monitor cartridges meet the 7th edition of EI 1583 Specifications and Qualification Procedures—Aviation Fuel Filter Monitors With Absorbent Type Elements.

The presence of water or solids in the incoming fuel will be indicated by an increase in the pressure differential or a decrease in the flow rate as the cartridges reach their maximum capacity for solids, water or a combination of both. When either happens, the cartridges should be replaced.

Each FG Series Fuel-Gard® monitor cartridge is constructed of various water absorbent media, plus fine filtration layers wrapped around a molded center tube for balanced flow and structural strength —all encased in a protective outer sock material. The end cap material is of injection molded, glass-filled nylon which provides superior strength and ease of maintenance. This material gives excellent support for the o-ring on the mounting/adaptor end.

Standard Design Features

- Tested and qualified to meet the 7th Edition of EI 1583 Specifications and Qualification Procedures —Aviation Fuel Filter Monitors With Absorbent Type Elements
- Multi-layered media for increased solids holding, water removal and shutdown protection
- New conductive end caps with anti-static properties which greatly reduce the possibility of static discharge during the fueling process
- Structurally withstands a minimum of 174 psid
- Not adversely affected by exposure to temperatures varying from -65°F to 160°F

DATA

MODEL NUMBER	NOMINAL LENGTH		OUTSIDE DIAMETER		INSIDE DIAMETER	
	in	mm	in	mm	in	mm
FG-205-7	5 7/8	150	1 3/4	45	7/8	23
FG-207-7	7 11/16	195	1 3/4	45	7/8	23
FG-210-7	10 7/8	276	1 3/4	45	7/8	23
FG-215-7	15 7/8	404	1 3/4	45	7/8	23
FG-217-7	17 7/8	454	1 3/4	45	7/8	23
FG-220-7	20 7/8	531	1 3/4	45	7/8	23
FG-225-7	25 7/8	658	1 3/4	45	7/8	23
FG-230-7	30 7/8	785	1 3/4	45	7/8	23

WARNING: MONITOR CARTRIDGES SHOULD NEVER BE USED WITH FUELS CONTAINING ANTI-ICING ADDITIVES SUCH AS FSII, PRIST AND DI-EGME. THIS INCLUDES PRE-MIXED AND MILITARY FUELS CONTAINING THESE ADDITIVES. THE USE OF MONITOR CARTRIDGES WITH FUELS CONTAINING ANTI-ICING ADDITIVES MAY RESULT IN (1) FAILURE OF THE MONITOR CARTRIDGE AND/OR (2) MIGRATION OF FILTRATION MEDIA INTO THE FUEL STREAM, EITHER OF WHICH COULD POTENTIALLY CAUSE DAMAGE TO RO SUDDEN FAILURE OF THE CORRESPONDING ENGINE. THE SUPPLIER SHALL NOT BE LIABLE IN ANY RESPECT FOR ANY DAMAGE OR LOSS THAT ARISES FROM THE USE OF MONITOR CARTRIDGES WITH FUELS CONTAINING ANTI-ICING ADDITIVES. SUCH USE IS ENTIRELY AT THE USER'S RISK.

FG Series
Fuel-Gard® EI 1583 Monitor Cartridges
6" OD - Outside/Inside Flow

For Maximum Water Absorption, Solids Holding Capacity and Shutdown Protection to Assure Clean, Dry Fuel

The Facet 6" (152 mm) nominal outside diameter FG Series Fuel-Gard® monitor cartridges perform three jobs to give you clean, dry fuel. They absorb free and emulsified water, remove ultra-fine solids and shut down system flow when hit with a localized slug of water. They are designed to flow from outside to inside at a rate of 4 gallons (15.14 liters) per inch of length.

Facet FG Series Fuel-Gard® monitor cartridges meet the 7th edition EI 1583 Specifications and Qualification Procedures—Aviation Fuel Monitors With Absorbent Type Elements.

The presence of water or solids in the incoming fuel will be indicated by an increase in the pressure differential or a decrease in the flow rate as the cartridge reaches its maximum capacity for solids, water or a combination of both. When either happens, the cartridge should be replaced.

Each FG Series Fuel-Gard® monitor cartridge is constructed of various water absorbent media, plus fine filtration layers pleated to give you long life. The perforated metal center tube provides for balanced flow and structural strength. The center tube supports both the pleated section and absorbent media when hit with a localized slug of water. The outer shell retains the media during and after shutdown.

Standard Design Features

- Tested and qualified to meet 4th edition of EI 1583 Specifications and Qualification Procedures—Aviation Fuel Filter Monitors With Absorbent Type Elements
- Multi-layered media for increased solids holding, water removal and shutdown protection
- All metal components are treated against corrosion
- Structurally withstands a minimum of 174 psid
- Heavy duty metal center tube and outer shell for extra structural strength
- Buna-N gaskets—Viton available on request
- Not adversely affected by exposure to temperatures varying from -65°F to 160°F

DATA

MODEL NUMBER	NOMINAL LENGTH		OUTSIDE DIAMETER		INSIDE DIAMETER	
	in	mm	in	mm	in	mm
FG-O-611-7	11¼	290	6	152	3½	89
FG-O-614SB-7	14½	370	6	152	3½	89
FG-O-614-7	14½	370	6	152	3½	89
FG-O-628-7	28¾	730	6	152	3½	89
FG-O-628SB-7	28¾	730	6	152	3½	89
FG-O-633-7	33¼	840	6	152	3½	89
FG-O-633SB-7	33¼	840	6	152	3½	89
FG-O-638-7	38	960	6	152	3½	89
FG-O-638SB-7	38	960	6	152	3½	89
FG-O-643SB-7	43	1050	6	152	3½	89
FG-O-643-7	43	1050	6	152	3½	89

GNG Series
Go-No-Go® Monitor Cartridges

Double-Duty for Twice the Protection

Facet's Go-No-Go (GNG) absorptive cartridges perform two jobs with one cartridge. It absorbs water and removes solids reliably and efficiently.
As the product stream flows from the outside of the cartridge to the inside, the GNG special water absorbent medium retains water, and the pleats expand. As the maximum water holding capacity is reached, there is a reduction in flow. The cartridge slows, then stops the flow of product as it reaches maximum capacity. This indicates that the cartridge is ready to be changed, assuring you of clean, dry product.

Benefits

- Absorbs highly emulsified water to less than 5 ppm
- Provides positive shut-off -increased differential pressure signals cartridge change-out
- Holds larger amounts of water than competition
- Ultra fine particulate removal efficiencies
- High collapse rating of cartridges
- Quick, easy cartridge change-out
- Easy housing installation

Standard Design Features

- Recommended maximum operating temperature: 180° F
- Maximum differential pressure: 100 psi (7.0 kg/cm²)
- Flow direction: Outside to in
- Layered multi-media pleated sections

Materials

- All metal components treated to protect against corrosion
- Special water absorbing medium
- Metal support shells
- Standard gasket material is Buna-N —other materials available upon request

Applications

- Fuel dispensing pumps
- Off-road machinery
- Service stations
- Marinas
- Trucks stops
- Bus fueling
- Diesel fuel
- Gasoline
- Kerosene
- Other engine fuels
- Various oils

GNG Series
Go-No-Go® Monitor Cartridges

RECOMMENDED FLOW RATES (5 MICRON)

MODEL		GNG-210-5PL		GNG-512-5PL		GNG-609-5PL		GNG-612-5PL		GNG-614-5PL		GNG-718-5PL	
viscosity		flow	ΔP	flow	ΔP	flow	ΔP	flow	ΔP	flow	ΔP	flow	ΔP
ssu	cs	gpm	psi	gpm	psi	gpm	psi	gpm	psi	gpm	psi	gpm	psi
29	1	20.0	2	50.0	3	45.0	4	60.0	4	50.0	2	75.0	2
32	2	20.0	3	48.0	4	36.0	4	50.0	4	58.0	4	74.0	4
39	4	18.0	4	36.0	4	27.0	4	37.0	4	43.0	4	55.0	4
46	6	12.0	4	24.0	4	18.0	4	25.0	4	29.0	4	37.0	4
58	10	7.0	4	14.0	4	11.0	4	15.0	4	18.0	4	23.0	4
98	20	3.6	4	7.0	4	5.5	4	7.5	4	9.0	4	12.0	4
140	30	2.4	4	5.0	4	3.6	4	5.0	4	6.0	4	8.0	4
190	40	1.8	4	3.6	4	2.7	4	3.75	4	4.0	4	5.0	4
230	50	1.4	4	2.8	4	2.1	4	3.0	4	3.0	4	4.0	4
342	75	1.0	4	1.9	4	1.4	4	2.0	4	2.0	4	2.5	4
455	100	0.7	4	1.4	4	1.0	4	1.5	4	2.0	4	2.25	4
910	200	0.3	4	0.7	4	0.5	4	.75	4	1.0	4	1.25	4
1365	300	0.2	4	0.4	4	0.3	4	.5	4	.5	4	.6	4
1818	400	0.1	4	0.3	4	0.25	4	.4	4	.4	4	.5	4

DIMENSIONS

MODEL	OUTSIDE DIAMETER		INSIDE DIAMETER		NOMINAL LENGTH	
	in	mm	in	mm	in	mm
GNG-210-5PL	2 5/8	67	1 1/32	26	9¾	248
GNG-210-25PL	2 5/8	67	1 1/32	26	9¾	248
GNG-412-5PL	4½	114	1¾	44	12 1/8	308
GNG-512-5PL	5 5/8	143	1 7/8	48	12¼	311
GNG-512-25PL	5 5/8	143	1 7/8	48	12¼	311
GNG-609-5PL	6	152	1½	38	9 13/16	249
GNG-609-25PL	6	152	1½	38	9 13/16	249
GNG-612-5PL	6	152	3½	89	12 11/16	322
GNG-612-25PL	6	152	3½	89	12 11/16	322
GNG-614-5PL	6	152	3½	89	14½	368
GNG-718-5PL	6	152	2 5/8	67	18	457
GNG-718-5PLZ	6	152	3 3/16	81	18	457
GNG-736-5PL	6	152	2 5/8	67	36	914

The dimensions are nominal. These are standard sizes. Normal delivery is 2-3 weeks ARO.
Many other sizes and combinations available. Please call us for special sizes.

TEMPERATURE / COMPATIBILITY GUIDE

MEDIA	MAXIMUM TEMPERATURE	pH RANGE	PETROLEUM PRODUCTS	CHEMICALS	AQUEOUS SOLUTIONS
Water Absorptive Media	180 °F	5 - 9	Excellent	Good	N/A

CARTRIDGE ORDERING INFORMATION

SERIES	DIMENSIONS	MICRON RATING	MEDIA	SPECIAL FEATURES
GNG	614 See Dimensions table	5 5, 25	PL PL = Pleated paper	J J = Non Asbestos Gasket N = Neoprene Gasket V = Viton Gasket Z = Special ID

Fuel-Gard® VF-21SB/22SB Coalescer Separator

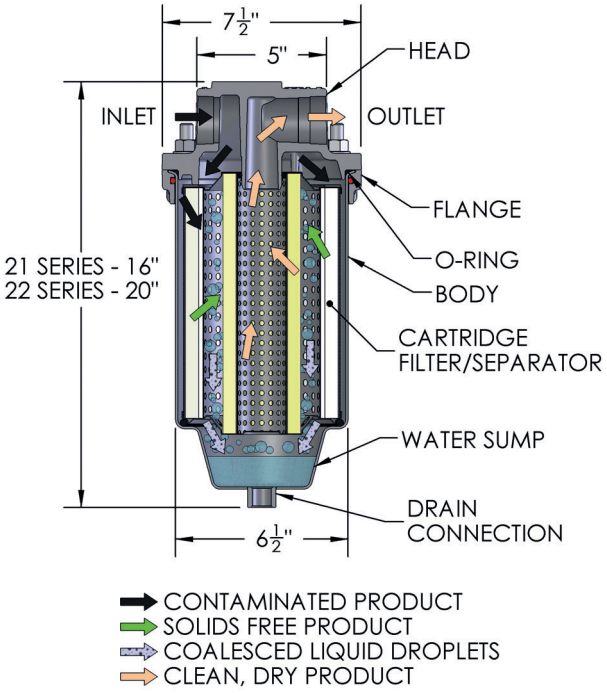

The Facet Fuel-Gard® VF-21SB/22SB , when configured as a coalescer separator, is an economical, compact housing designed to remove water and solids from aviation fuels.

Both interior and exterior surfaces of the carbon steel body are epoxy coated to protect against corrosion. This sturdy, single cartridge housing is easy to maintain and requires only 2" (51 mm) base clearance for cartridge change out.

Standard Housing Design

- Carbon steel body
- Aluminum head
- Epoxy coated internally and externally
- 150 psi (10.5 kg/cm²) design pressure
- Swing bolt quick open closure
- Buna-N o-ring closure gasket
- Vent and drain connections w/ brass petcocks provided
- 1½" NPT inlet and outlet connections

VESSEL OPTIONS

MODEL	DESCRIPTION
VF-21SB	Housing only
VF-21SB-PG	Housing w/ Direct Reading Differential Pressure Gauge
VF-21SB-PGS	Housing w/ Direct Reading Differential Pressure Gauge & Sight Glass
VF-21SB-PGWP	Housing w/ Direct Reading Differential Pressure Gauge & ¾" Coupling for Water Probe
VF-21SB-S	Housing w/ Sight Glass
VF-21SB-WP	Housing w/ ¾" Coupling for Water Probe
VF-22SB	Housing only
VF-22SB-PG	Housing w/ Direct Reading Differential Pressure Gauge
VF-22SB-PGS	Housing w/ Direct Reading Differential Pressure Gauge & Sight Glass
VF-22SB-PGWP	Housing w/ Direct Reading Differential Pressure Gauge & ¾" Coupling for Water Probe
VF-22SB-S	Housing w/ Sight Glass
VF-22SB-WP	Housing w/ ¾" Coupling for Water Probe
644160	Mounting Bracket
644964	Grounding Cable

Differential Pressure Gauge- The piston-type differential pressure gauge provides a simple visual warning. When 15 psi differential pressure is reached, the gauge indicator moves from green to red zone. This warning will prevent premature cartridge change-out.

Water Sight Glass- The water sight glass provides an easy means to detect water in the sump. The weighted ball, visible in the sight glass, will float only when water is present. The floating ball is an indication water should be drained from the housing to prevent both cartridge contamination and water traveling downstream from the housing.

ACCORDING TO THE REQUIREMENTS OF EUROPEAN PRESSURE EQUIPMENT DIRECTIVE (PED) 2014/68/EU ART. 4.3, WITHIN THE OPERATING LIMITS PROVIDED ON VESSEL NAMEPLATE AND SUMMARIZED BELOW, THESE FILTERS ARE DESIGNED AND MANUFACTURED IN ACCORDANCE WITH THE SOUND ENGINEERING PRACTICE AND EXEMPT FROM CE MARKING AND CERTIFICATION: 10 BAR(G) @ 35°C FOR AV-GAS AND JET FUEL.

Standard Design Features

- Recommended maximum operating temperature: 180°F
- Maximum differential pressure: 75 psi (5.25 kg/cm²)
- pH range from 5 to 9
- Flow direction: Outside to in
- Cartridge dimensions: OD - 6" (152 mm), ID - 1 ½" (38 mm), Nominal Length - 9" (229 mm)

Materials

- Carbon steel structural components
- All metal components coated to protect against corrosion
- Standard gaskets are Buna-N —other materials available on request

COMPRESSED AIR OR GAS

OPERATING PRESSURE	
psi	kg/cm²
10	.70
25	1.76
40	2.80
50	3.50
75	5.25
100	7.0
150	10.5

FLOW RATES

MODEL NUMBER	MICRON RATING	MAX. RECOMMENDED FLOW RATE					
		DIESEL		KEROSENE		GASOLINE	
		gpm	lpm	gpm	lpm	gpm	lpm
FILTER SEPARATOR							
CC-21-7	1	23	87	35	133	45	170
CC-21B	10	23	87	35	133	45	170
CC-21C	25	23	87	35	133	45	170
FILTER							
CF-609-2PLO	2	45	170	45	170	45	170
CF-609-10PLO	10	45	170	45	170	45	170
CF-609-25PLO	25	45	170	45	170	45	170
ABSORPTIVE FILTER							
FG-O-609-2[1]	1	18	68	36	136	45	170
GNG-609-5PL	5	18	68	36	136	45	170
GNG-609-25PL	25	18	68	36	136	45	170

1.- EI Specification tested and approved.

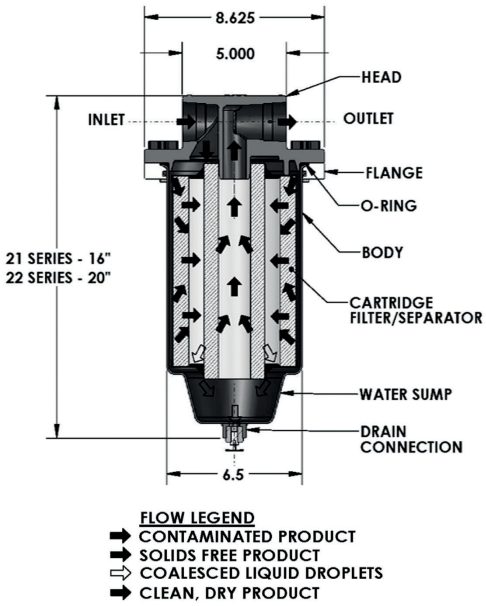

MODEL LEGEND

HOUSING	SERIES	ELEMENT TYPE	OPTIONS
VFCS (filter separator) VF (filter) VFG (absorptive)	21 or 22	See table for element options	PU15 = 15 psi pop up indicator PU25 = 25psi pop up indicator PG = piston type S = sight glass

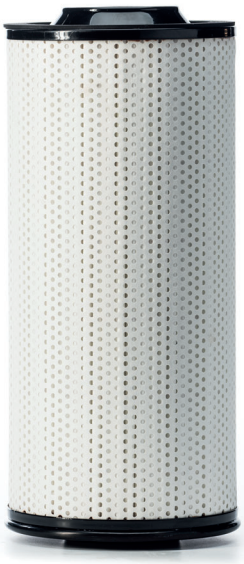

Standard Design Features

- Recommended maximum operating temperature: 180°F
- Maximum differential pressure: 75 psi (5.25 kg/cm²)
- pH range from 5 to 9
- Flow direction: Outside to in
- Cartridge dimensions: OD - 6" (152 mm), ID - 1 ½" (38 mm), Nominal Length - 12" (305 mm)

Materials

- Carbon steel structural components
- All metal components coated to protect against corrosion
- Standard gaskets are Buna-N —other materials available on request

COMPRESSED AIR OR GAS

OPERATING PRESSURE		FLOW
psi	kg/cm²	scfm
10	.70	113
25	1.76	143
40	2.80	158
50	3.50	180
75	5.25	203
100	7.0	233
150	10.5	270

FLOW RATES

MODEL NUMBER	MICRON RATING	MAX. RECOMMENDED FLOW RATE					
		DIESEL		KEROSENE		GASOLINE	
		gpm	lpm	gpm	lpm	gpm	lpm
FILTER SEPARATOR							
CC-22-7	1	30	114	50	189	60	227
CC-22B	10	30	114	50	189	60	227
CC-22C	25	30	114	50	189	60	227
FILTER							
CF-612-2PLO	2	56	212	56	212	56	212
CF-612-10PLO	10	56	212	56	212	56	212
CF-612-25PLO	25	56	212	56	212	56	212
ABSORPTIVE FILTER							
FG-O-612-2[1]	1	25	95	50	189	60	227
GNG-612-5PL	5	25	95	50	189	60	227
GNG-612-25PL	25	25	95	50	189	60	227

1.- EI Specification tested and approved.

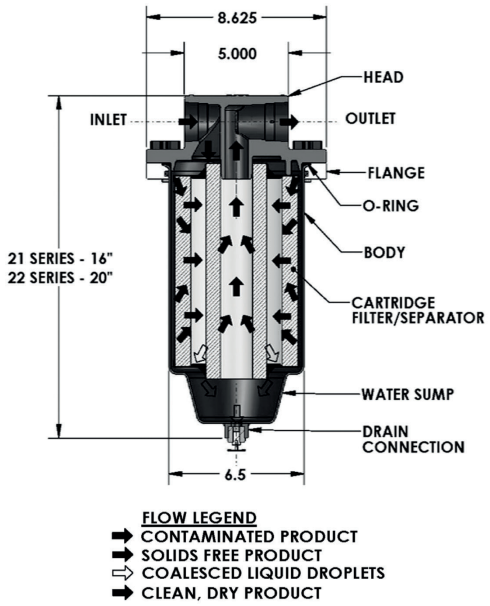

MODEL LEGEND

HOUSING	SERIES	ELEMENT TYPE	OPTIONS
VFCS (filter separator) VF (filter) VFG (absorptive)	21 or 22	See table for element options	PU15 = 15 psi pop up indicator PU25 = 25psi pop up indicator PG = piston type S = sight glass

Bilge Water Separators with Ceramic Membrane
CPS 3.2E + EMB

High Design and Construction Technology

Experience, knowledge and innovation, united to develop a compact, small footprint and lightweight equipment fully driven by a PLC.

The presence of emulsified oil in the bilge water of the latest generation vessels caused IMO to issue the resolution MEPC.107(49), which requires that the resulting effluent after bilge water treatment must contain levels below 15 ppm of surfactants.

The treatment of this type of water using traditional bilge water separators has resulted ineffective in achieving these results, so in order to comply with this resolution, in Facet we have developed the bilge water separators with ceramic membrane.

The combination of this technology together with Facet MPak® coalescent plates has allowed that our Facet CPS 3.2E + EMB Separators meet the strict requirements of the aforementioned IMO regulation.

Results

CPS 3.2E + EMB equipment eliminates hydrocarbons in two stages. In the first stage, the free hydrocarbon is separated from water through Facet coalescing plates, while in the second stage emulsions are broken by the ceramic membrane which removes emulsified hydrocarbon, reaching down an effluent with total hydrocarbon content of less than 5 ppm.

Standard Design Features

- Flow rate homologated: 0.73 m³/h (3.2 USGPM)
- Supplied ready to be installed
- No moving components other than pumps and pneumatic valves.
- Fixed control level, without float
- Very low maintenance, consisting in occasional hosing cleaning of the plates, and membrane's hot self-cleaning process. No chemicals needed in both operations
- Water presence less than 5% in the separated oil, so it can be burned if required
- Separated oil discharge facilitated by pump
- Power supply 380/440V, 50 or 60 Hz

Accessories

The equipment is supplied with the following accessories:

- Bilge alarm: as latest IMO MEPC. 107(49) resolution

Approvals

Facet CPS 3.2E + EMB has been tested, approved and certified according to the requirements of IMO MEPC.107(49).

Bilge Water Separators with Ceramic Membrane
CPS 3.2E + EMB

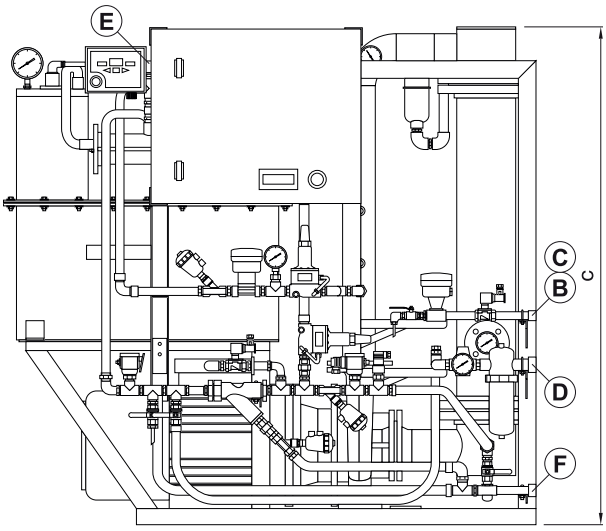

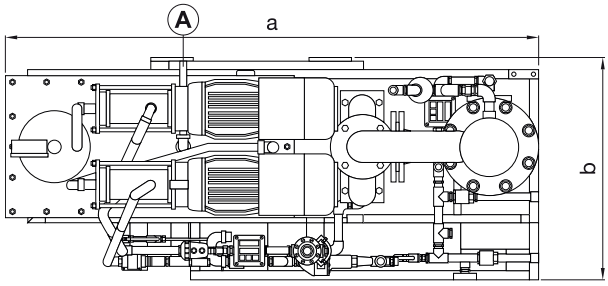

MARK	SERVICE
A	Oil / Water from bilge tank
B	Overboard discharge
C	Bilge back
D	Potable water inlet
E	Oil discharge
F	Common drain to bilge

MODEL	DIMENSIONS						EMPTY WEIGHT		WORKING WEIGHT	
	a		b		c					
	in	mm	in	mm	in	mm	lbs	kg	lbs	kg
CPS 3.2E +EMB	50 3/8	1280	24 5/8	625	70 27/32	1800	1047	475	1322	600

Bilge Water Separators with Ceramic Membrane
CPS 3.2E + EMB

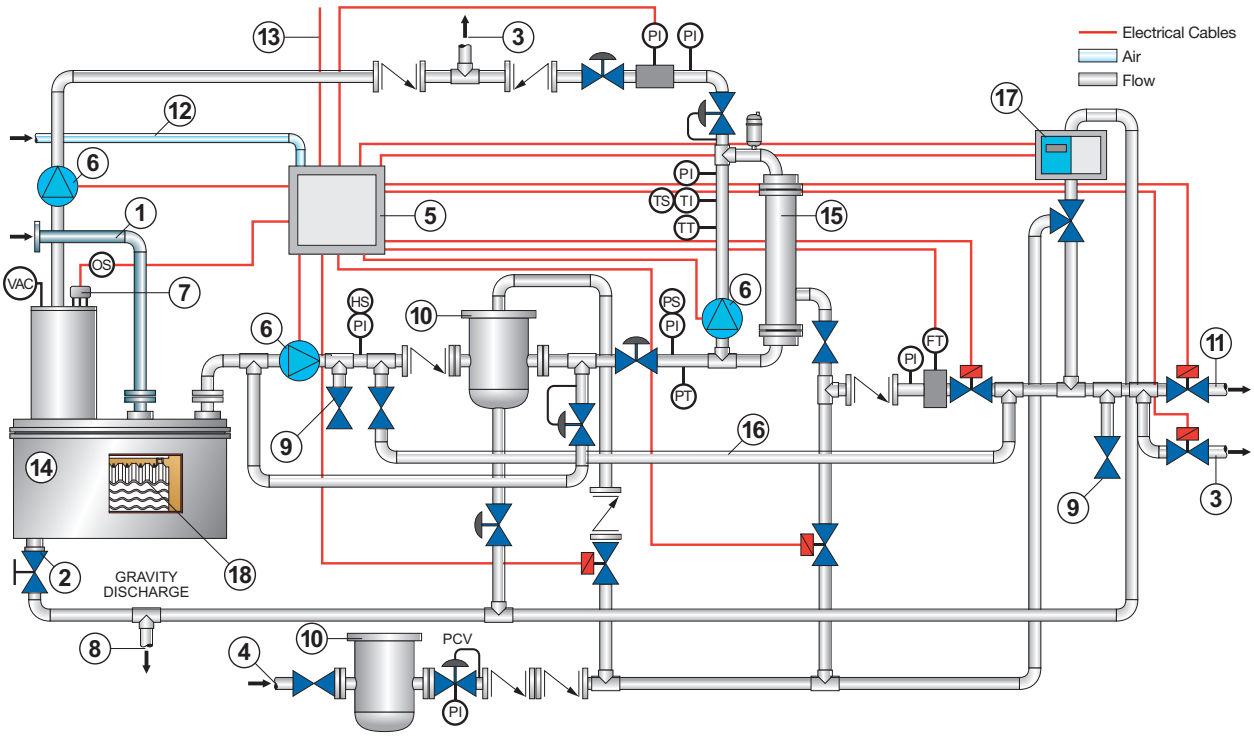

ITEM	DESCRIPTION
1	Oily water inlet line from bilge
2	Drain
3	Oil outlet
4	Pressure potable water
5	Control panel
6	Pump
7	Level control
8	Back to bilge line
9	Sample probe
10	Filter
11	Overboard water outlet line
12	Air line (customer supply)
13	Electrical line (customer supply)
14	Facet CPS 3.2E
15	Polishing module
16	Membrane by-pass
17	Bilge alarm
18	Facet MPak®

Bilge Water Separators with Ceramic Membrane for Submarines
CPS 3.2E + EMB

High Design and Construction Technology

Experience, knowledge and innovation, united to develop a compact, small footprint and lightweight equipment fully driven by a PLC.

The presence of emulsified oil in the bilge water of the latest generation vessels caused IMO to issue the resolution MEPC.107(49), which requires that the resulting effluent after bilge water treatment must contain levels below 15 ppm of surfactants.

The treatment of this type of water using traditional bilge water separators has resulted ineffective in achieving these results, so in order to comply with this resolution, in Facet we have developed the bilge water separators with ceramic membrane.

The combination of this technology together with Facet MPak® coalescent plates has allowed that our Facet CPS 3.2E + EMB Separators meet the strict requirements of the aforementioned IMO regulation.

Results

CPS 3.2E + EMB equipment eliminates hydrocarbons in two stages. In the first stage, the free hydrocarbon is separated from water through Facet coalescing plates, while in the second stage emulsions are broken by the ceramic membrane which removes emulsified hydrocarbon, reaching down an effluent with total hydrocarbon content of less than 5 ppm.

Standard Design Features

- Flow rate homologated: 0.73 m³/h (3.2 USGPM)
- Supplied ready to be installed
- No moving components other than pumps and pneumatic valves.
- Fixed control level, without float
- Very low maintenance, consisting in occasional hosing cleaning of the plates, and membrane's hot self-cleaning process. No chemicals needed in both operations
- Water presence less than 5% in the separated oil, so it can be burned if required
- Separated oil discharge facilitated by pump
- Power supply 380/440V, 50 or 60 Hz

Accessories

The equipment is supplied with the following accessories:

- Bilge alarm: as latest IMO MEPC. 107(49) resolution

Approvals

Facet CPS 3.2E + EMB has been tested, approved and certified according to the requirements of IMO MEPC.107(49).

Bilge Water Separators with Ceramic Membrane for Submarines
CPS 3.2E + EMB

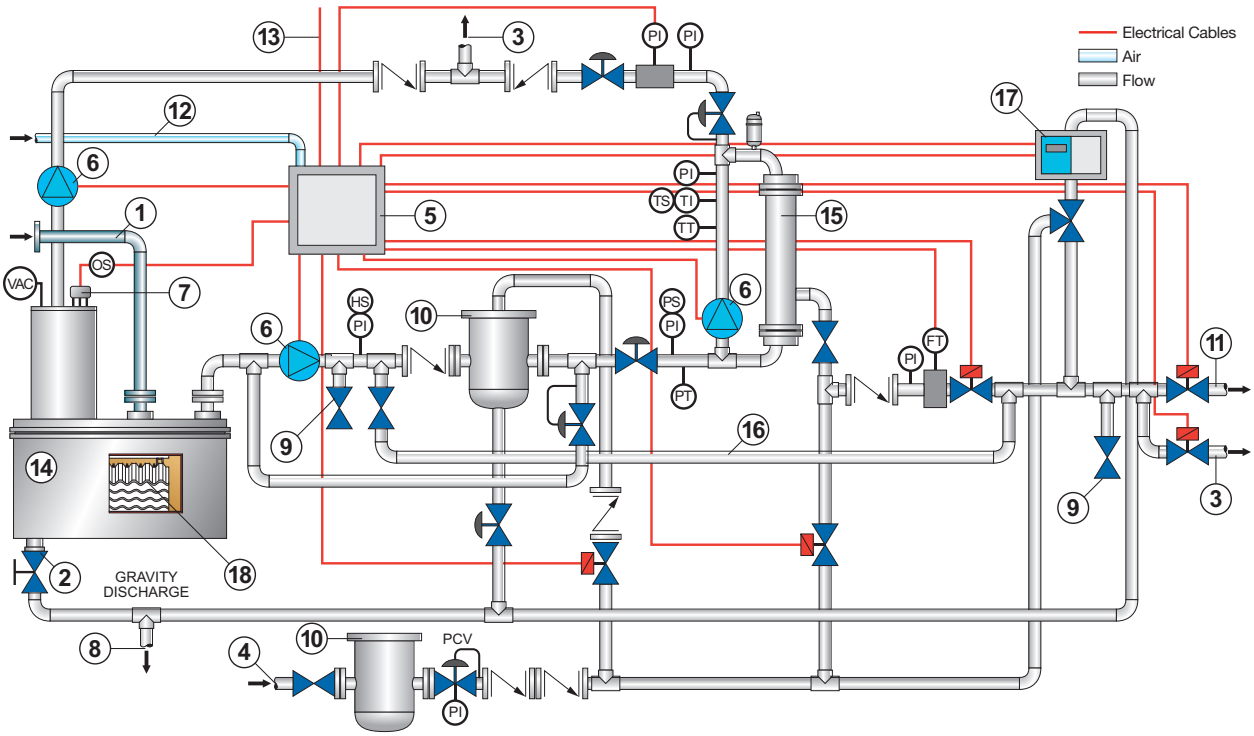

ITEM	DESCRIPTION
1	Oily water inlet line from bilge
2	Drain
3	Oil outlet
4	Pressure potable water
5	Control panel
6	Pump
7	Level control
8	Back to bilge line
9	Sample probe
10	Filter
11	Overboard water outlet line
12	Air line (customer supply)
13	Electrical line (customer supply)
14	Facet CPS 3.2E
15	Polishing module
16	Membrane by-pass
17	Bilge alarm
18	Facet MPak®

Bilge Water Separators with Ceramic Membrane
CPS-10B MKIII + EMB

High Design and Construction Technology

Experience, knowledge and innovation, united to develop a compact, small footprint and lightweight equipment fully driven by a PLC.

The presence of emulsified oil in the bilge water of the latest generation vessels caused IMO to issue the resolution MEPC.107(49), which requires that the resulting effluent after bilge water treatment must contain levels below 15 ppm of surfactants.

The treatment of this type of water using traditional bilge water separators has resulted ineffective in achieving these results, so in order to comply with this resolution, in Facet we have developed the bilge water separators with ceramic membrane.

The combination of this technology together with Facet MPak® coalescent plates has allowed that our Facet CPS 10B MKIII + EMB Separators meet the strict requirements of the aforementioned IMO regulation.

Results

CPS 10B MKIII + EMB equipment eliminates hydrocarbons in two stages. In the first stage, the free hydrocarbon is separated from water through Facet coalescing plates, while in the second stage emulsions are broken by the ceramic membrane which removes emulsified hydrocarbon, reaching down an effluent with total hydrocarbon content of less than 5 ppm.

Standard Design Features

- Flow rate homologated: 2.5 m³/h (10 USGPM)
- Supplied ready to be installed
- No moving components other than pumps and pneumatic valves.
- Fixed control level, without float
- Very low maintenance, consisting in occasional hosing cleaning of the plates, and membrane's hot self-cleaning process. No chemicals needed in both operations
- Water presence less than 5% in the separated oil, so it can be burned if required
- Separated oil discharge facilitated by pump
- Power supply 380/440V, 50 or 60 Hz

Accessories

The equipment is supplied with the following accessories:

- Bilge alarm: as latest IMO MEPC. 107(49) resolution
- Electric heater in the oil dome to facilitate heavy oil discharge (if required)

Approvals

Facet CPS 10B MKIII + EMB has been tested, approved and certified according to the requirements of IMO MEPC.107(49).

Bilge Water Separators with Ceramic Membrane
CPS-10B MKIII + EMB

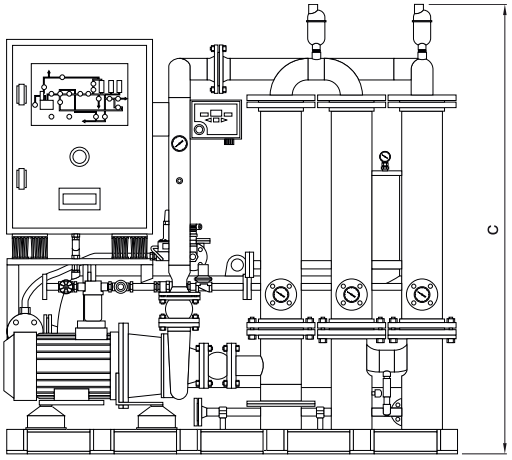

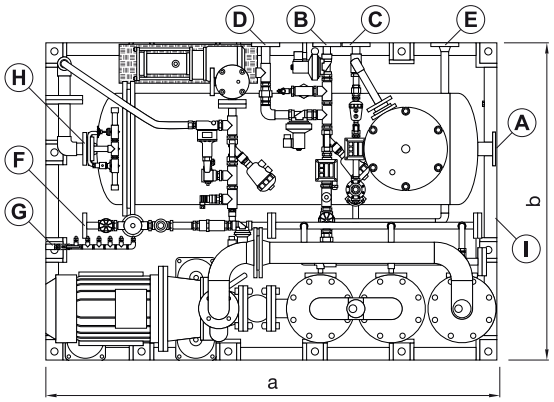

MARK	SERVICE
A	Oil / water from bilge tank
B	Overboard discharge
C	Oil concentrate discharge
D	Bilge / tank recirculation
E	Common drain to bilge
F	Potablle water inlet
G	Air inlet
H	Clean water inlet
I	Drain for spills tray

MODEL	DIMENSIONS					
	a		b		c	
	in	mm	in	mm	in	mm
CPS 10B MKIII +EMB	70 13/16	1800	51 1/8	1300	72 3/4	1850

Bilge Water Separators with Ceramic Membrane
CPS-10B MKIII + EMB

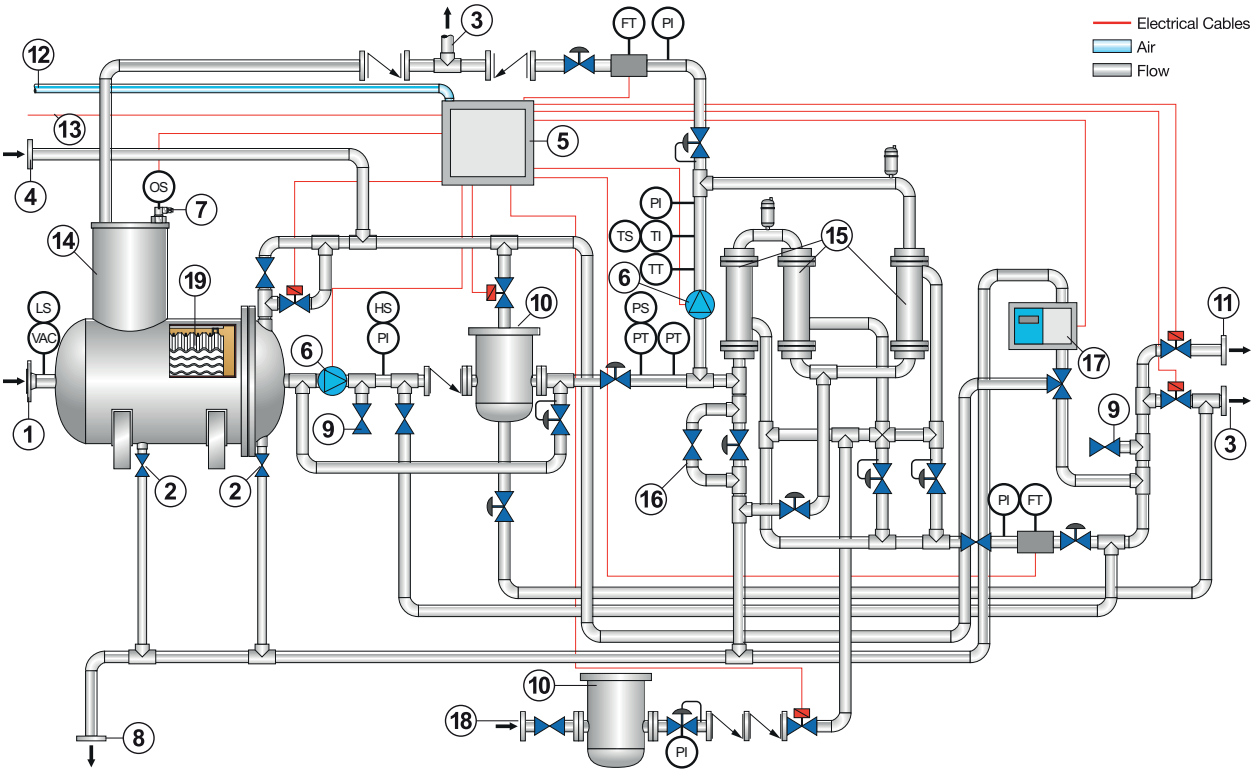

ITEM	DESCRIPTION
1	Oily water inlet line from bilge
2	Drain
3	Oil outlet
4	Clean water inlet
5	Control panel
6	Pump
7	Level control
8	Back to bilge line
9	Sample probe
10	Filter
11	Overboard water outlet line
12	Air line (customer supply)
13	Electrical line (customer supply)
14	Facet CPS 10B MKIII
15	Polishing module
16	Membrane by-pass
17	Bilge alarm
18	Pressure potable water
19	Facet MPak®

Bilge Water Separators with Disposal Membrane
CPS 3.2E + EBM 14x1

Small volume: 0.53 m³ (18.7 cu.ft.).
Low working weight: 412 Kgs.
Great treatment capacity: 17.28 m³/day (4,565 usg/day).
Cost effective.
IMO MEPC 107(49) APPROVED.

Facet CPS 3.2E + EBM 14x1 bilge water separator is a device compact, adaptable to the small spaces available on board, lightweight and low maintenance. Its operation is very easy and completely automatic, with all its functions controlled through a PLC.

The presence of emulsified oil in the bilge water of the latest generation vessels caused IMO to issue the resolution MEPC.107(49), which requires that the resulting effluent after bilge water treatment must contain levels below 15 ppm of surfactants.

This model combines the classic coalescing plates Facet MPak® with the disposal membranes which achieve a high efficiency in the breakdown of chemical and mechanical emulsions.

This combination allows that Facet CPS 3.2E + EBM 14x1 Separator meets the strict requirements of the aforementioned IMO regulation.

Results

Facet CPS 3.2E + EBM 14x1 eliminates hydrocarbons in two stages. In the first stage, free hydrocarbon is separated from water through Facet coalescing plates, while in the second stage emulsions are broken by a membrane which removes emulsified hydrocarbon, reaching down an effluent with total hydrocarbon content of less than 5 ppm.

Standard Design Features

- Flow rate homologated: 0.73 m³/h (3.2 USGPM)
- Supplied ready to be installed
- No moving components other than pumps and pneumatic valves.
- Fixed control level, without float
- Very low maintenance, consisting in occasional hosing cleaning of the plates, and membrane replacement. No chemicals needed in both operations
- Water presence less than 5% in the separated oil, so it can be burned if required
- Power supply 380/440V, 50 or 60 Hz

Accessories

The equipment is supplied with the following accessories:

- Bilge alarm: as latest IMO MEPC. 107(49) resolution
- Electric heater in the oil dome to facilitate heavy oil discharge (if required)

Approvals

Facet CPS 10B MKIII + EMB has been tested, approved and certified according to the requirements of IMO MEPC.107(49).

Bilge Water Separators with Disposal Membrane
CPS 3.2E + EBM 14x1

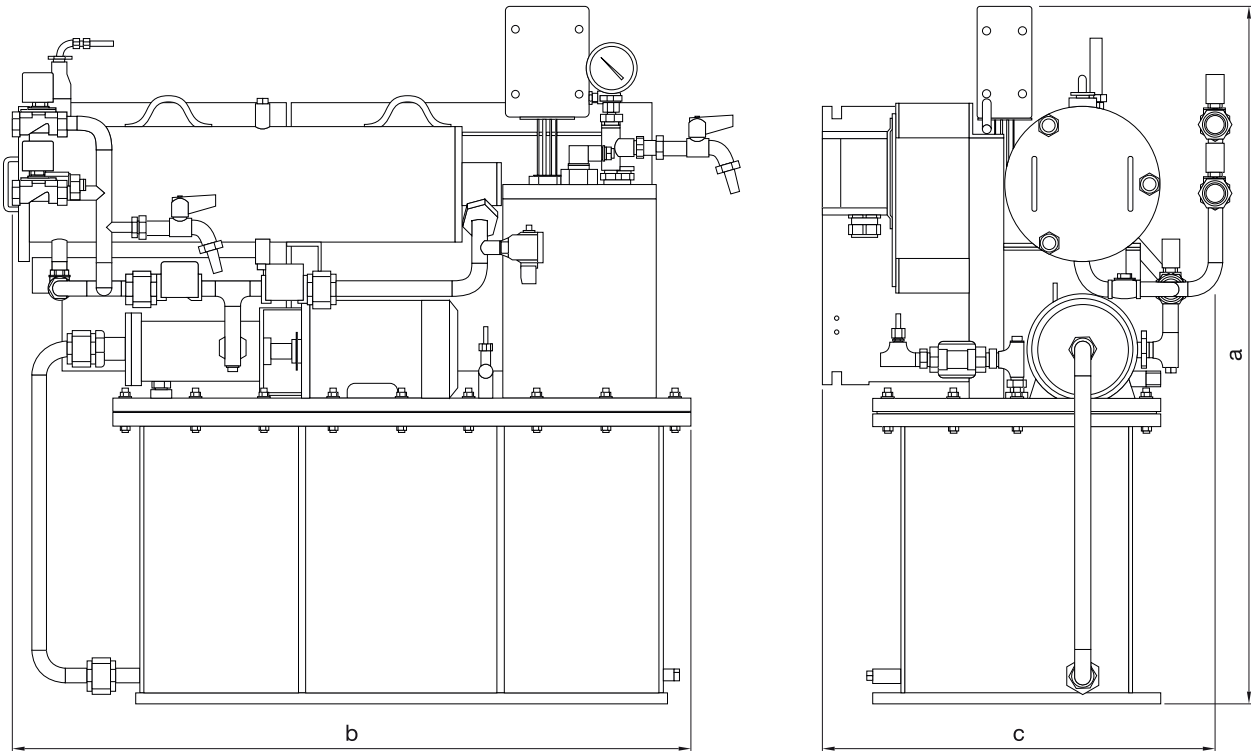

MODEL	DIMENSIONS						VOLUME		WEIGHT		WORKING WEIGHT	
	a		b		c							
	in	mm	in	mm	in	mm	ft³	m³	lbs	kg	lbs	kg
CPS 3.2E + EBM 14x1	39⅜	1000	38½	980	22¼	565	18.72	0.53	630	286	908	412

Bilge Water Separators with Disposal Membrane
CPS 3.2E + EBM 14x1

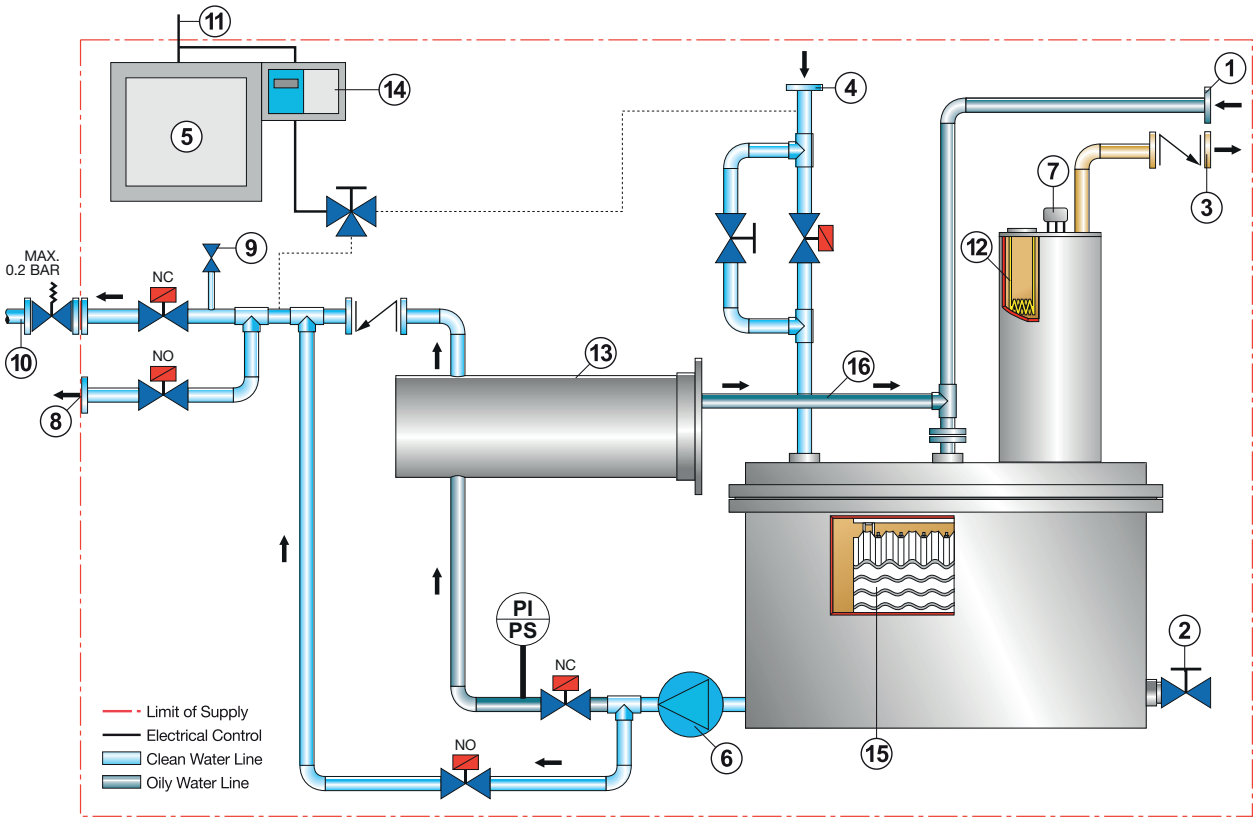

ITEM	DESCRIPTION
1	Oily water inlet line from bilge
2	Drain
3	Oil outlet
4	Clean water inlet
5	Control panel
6	Pump
7	Level control
8	Back to bilge line
9	Sample point
10	Overboard water outlet line
11	Electrical line (customer supply)
12	Heater (optional)
13	EBM 14x Separator module
14	PPM alarm & sensor
15	Facet MPak®
16	Oil return line

Bilge Water Separators with Disposal Membrane
CPS B MKIII + EBM 14x

Facet bilge water separator is a device compact, adaptable to the small spaces available on board, lightweight and low maintenance.
Its operation is very easy and completely automatic, with all its functions controlled through a PLC.

The presence of emulsified oil in the bilge water of the latest generation vessels caused IMO to issue the resolution MEPC.107(49), which requires that the resulting effluent after bilge water treatment must contain levels below 15 ppm of surfactants.

This model combines the classic coalescing plates Facet MPak® with the disposal membranes which achieve a high efficiency in the breakdown of chemical and mechanical emulsions.

This combination allows that Facet CPS B MKIII + EBM 14x Separator meets the strict requirements of the aforementioned IMO regulation.

Results

Facet CPS B MKIII + EBM 14x eliminates hydrocarbons in two stages. In the first stage, free hydrocarbon is separated from water through Facet coalescing plates, while in the second stage emulsions are broken by a membrane which removes emulsified hydrocarbon, reaching down an effluent with total hydrocarbon content of less than 5 ppm.

Standard Design Features

- Flow rate range homologated: from 0.5 m^3/h (2.2 USGPM) to 10 m^3/h (44 usgpm)
- Supplied ready to be installed
- No moving components other than pumps and pneumatic valves.
- Fixed control level, without float
- Very low maintenance, consisting in occasional hosing cleaning of the plates, and membrane replacement. No chemicals needed in both operations
- Water presence less than 5% in the separated oil, so it can be burned if required
- Power supply 380/440V, 50 or 60 Hz

Accessories

The equipment is supplied with the following accessories:

- Bilge alarm: as latest IMO MEPC. 107(49) resolution
- Electric heater in the oil dome to facilitate heavy oil discharge (if required)

Approvals

Facet CPS B MKIII + EBM 14x bilge water separators have been tested, approved and certified according to the requirements of IMO MEPC.107(49).

Bilge Water Separators with Disposal Membrane
CPS B MKIII + EBM 14x

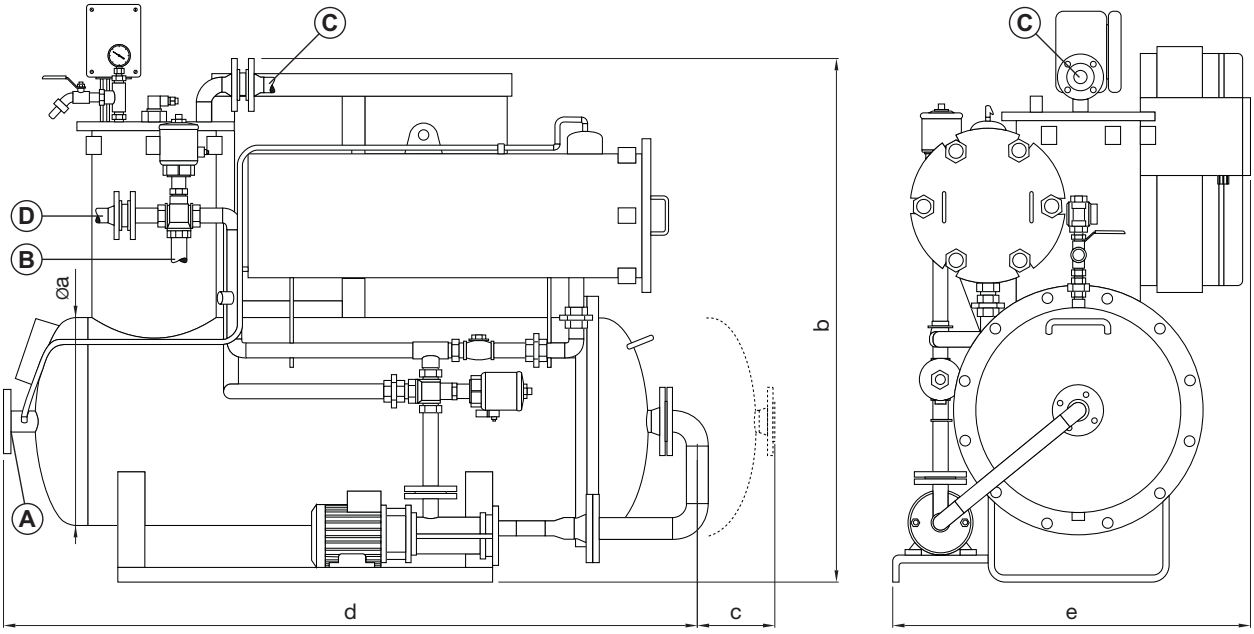

MODEL	DIMENSIONS										FLOW		WEIGHT		WORKING WEIGHT	
	a		b		c		d		e							
	in	mm	in	mm	in	mm	in	mm	in	mm	gpm	m³/h	lbs	kg	lbs	kg
CPS 2.5B MKIII+EBM 14x1	18 1/32	457	39 3/8	1000	10 3/4	275	33 7/8	860	32 1/4	820	2.2	0.5	573	260	948	430
CPS 5B MKIII+EBM 14x1	18 1/32	457	39 3/8	1000	10 3/4	275	45	1145	33 1/2	850	4.4	1	617	280	1036	470
CPS 10B MKIII+EBM 14x2	18 1/32	457	39 3/8	1000	39 11/16	1010	69 1/16	1755	32 1/4	820	11	2.5	915	415	1598	725
CPS 25B MKIII+EBM 3 14x2	35 7/16	900	57 1/8	1450	29 7/8	760	61 1/2	1565	51 11/16	1315	22	5	1620	735	3891	1765
CPS 50B MKIII+EBM 3 14x3	35 7/16	900	61 1/16	1550	29 7/8	760	86 1/16	2185	51 11/16	1315	44	10	1786	810	5357	2430

MODEL	CONNECTIONS			
	A (Inlet)	B (Discharge to sea)	C (Oil Discharge)	D (Discharge to Bilge)
CPS 2.5B MKIII+EBM 14x1	DN32 PN10/16	½" BSP	DN25 PN10	DN15 PN10
CPS 5B MKIII+EBM 14x1	DN32 PN10/16	1" BSP	DN25 PN10	DN25 PN10
CPS 10B MKIII+EBM 14x2	DN32 PN10/16	1" BSP	DN25 PN10	DN25 PN10
CPS 25B MKIII+EBM 3 14x2	DN65 PN10/16	2" BSP	DN50 PN10	DN50 PN10
CPS 50B MKIII+EBM 3 14x3	DN65 PN10/16	2" BSP	DN50 PN10	DN50 PN10

Bilge Water Separators with Disposal Membrane
CPS B MKIII + EBM 14x

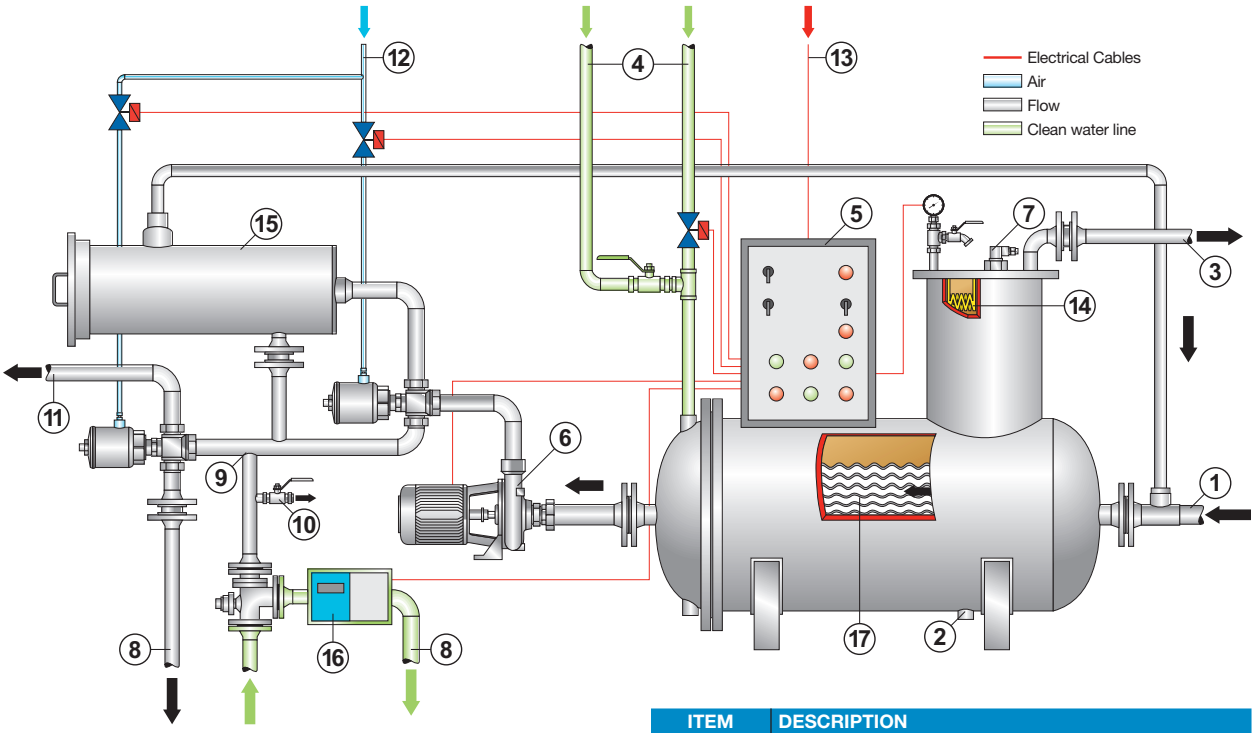

ITEM	DESCRIPTION
1	Oily water inlet line from bilge
2	Drain
3	Oil outlet
4	Clean water inlet
5	Control panel
6	Pump
7	Level control
8	Back to bilge line
9	Sample probe
10	Sample point
11	Overboard water outlet line
12	Air line (customer supply)
13	Electrical line (customer supply)
14	Heater (optional)
15	EBM 14x Separator module
16	PPM alarm & sensor
17	Facet MPak®

MAS Series
Oil Water Separators for Offshore Applications

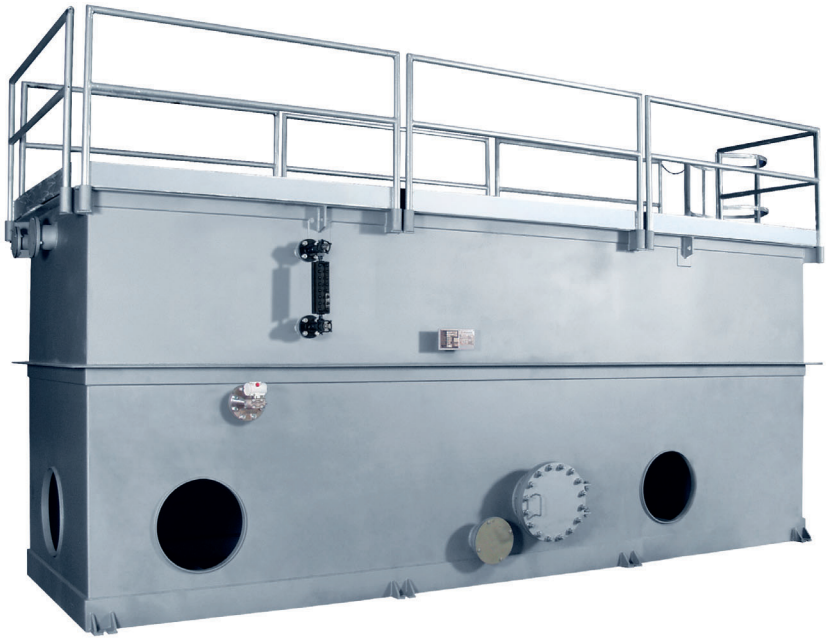

Facet Model MAS Oil Water Separators are designed to treat hydrocarbon water. These separators can be fed by gravity or pumped. These separators carry out separation by physical means, do not require consumables and have no mobile parts, therefore no maintenance is needed and its operation is free of failures.

These Plates are mounted in modular packs and provided with an adjust device against the vessel that secures that all the flow to be treated goes through the Plates. Optimal working range temperature of Plate Packs MPak® is 4 to 98 °C (40 to 208 °F). Each separator of the Model MAS can be equipped with adjustable skimmers to withdraw separated hydrocarbons. Optionally, they can also be provided with a storage chamber to accumulate separated hydrocarbons.

Standard Features

- Access covers for easy adjustment of oil skimmers
- Epoxy coating interior and exterior
- MPak® plate packs: frame in steel and plastic hardware media is oleophilic polypropylene
- Clean plate packs in place -no need to remove from unit
- Solids collection connections built into all units
- ¾",¼" or ½" MPak® coalescing plate spacing
- Computerized effluent predictions for accurate sizing
- Skid in carbon steel
- Safety closure device in the outlet

Engineering Specifications

- Flanges: ANSI B16.5
- Material of construction: carbon steel
- Separator hydrostatically tested for ½ hour
- Welding in accordance with the latest edition of A.W.S.

Standard Connections

- Inlet and outlet: 150# R.F.S.O.
- Solids cleanout: 150# R.F.S.O.
- Drain: 150# R.F.S.O.
- Heater: 2 ½" NPT coupling (heaters optional)

Options

- Two adjustable oil skimmers
- Oil storage tank
- Oil pump control station: includes pump and motor, control panel, high and low level float switches
- Immersion heater: Available in various ratings
- Gasketed covers

MAS Series
Oil Water Separators for Offshore Applications

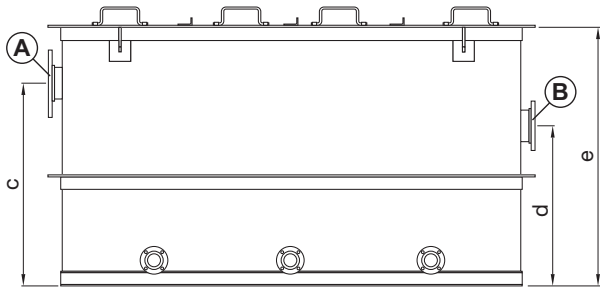

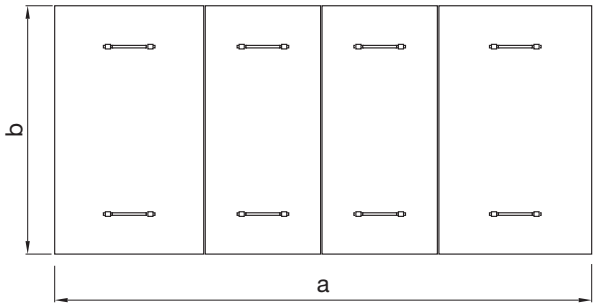

MODEL	DIMENSIONS										FLOW		WEIGHT		CONNECTIONS	
	a		b		c		d		e							
	in	mm	in	mm	in	mm	in	mm	in	mm	gpm	lpm	lbs	kg	A (Inlet)	B (Outlet)
MAS 22-1	109 1/16	2770	24 3/4	630	52 1/8	1324	33 7/8	860	63 5/8	1620	60-100	227-379	2320	1052	DN150	DN150
MAS 22-2	93 5/8	3380	24 3/4	630	52 1/8	1324	33 7/8	860	63 5/8	1620	60-100	227-379	2917	1323	DN150	DN150
MAS 22-3	157 1/8	3990	24 3/4	630	52 1/8	1324	33 7/8	860	63 5/8	1620	60-100	227-379	5230	1601	DN150	DN150
MAS 32-1	109 1/16	2770	36 1/2	930	52 1/8	1324	33 7/8	860	63 5/8	1620	80-150	340-568	3195	1449	DN150	DN150
MAS 32-2	93 5/8	3380	36 1/2	930	52 1/8	1324	33 7/8	860	63 5/8	1620	80-150	340-568	4020	1824	DN150	DN150
MAS 32-3	157 1/8	3990	36 1/2	930	52 1/8	1324	33 7/8	860	63 5/8	1620	80-150	340-568	4785	2170	DN150	DN150
MAS 52-1	109 1/16	2770	60 5/8	1540	57 7/8	1470	39 7/8	1010	70	1780	150-250	568-946	3933	1784	DN150	DN150
MAS 52-2	93 5/8	3380	60 5/8	1540	57 7/8	1470	39 7/8	1010	70	1780	150-250	568-946	5101	2314	DN150	DN150
MAS 52-3	157 1/8	3990	60 5/8	1540	57 7/8	1470	39 7/8	1010	70	1780	150-250	568-946	6263	2841	DN150	DN150
MAS 53-1	109 1/16	2770	60 5/8	1540	64 7/8	1650	44 7/8	1140	79 7/8	2030	225-375	852-1419	4442	2105	DN200	DN200
MAS 53-2	93 5/8	3380	60 5/8	1540	64 7/8	1650	44 7/8	1140	79 7/8	2030	225-375	852-1419	5948	2698	DN200	DN200
MAS 53-3	157 1/8	3990	60 5/8	1540	64 7/8	1650	44 7/8	1140	79 7/8	2030	225-375	852-1419	7253	3290	DN200	DN200
MAS 64-1	109 1/16	2770	72 3/4	1850	77 7/8	1980	55 3/4	1420	96 1/16	2440	360-600	1363-2271	7634	3463	DN250	DN250
MAS 64-2	93 5/8	3380	72 3/4	1850	77 7/8	1980	55 3/4	1420	96 1/16	2440	360-600	1363-2271	9704	4402	DN250	DN250
MAS 64-3	157 1/8	3990	72 3/4	1850	77 7/8	1980	55 3/4	1420	96 1/16	2440	360-600	1363-2271	11781	5344	DN250	DN250
MAS 74-1	109 1/16	2770	84 9/16	2150	77 7/8	1980	55 3/4	1420	96 1/16	2440	420-700	1590-2650	8476	3845	DN250	DN250
MAS 74-2	93 5/8	3380	84 9/16	2150	77 7/8	1980	55 3/4	1420	96 1/16	2440	420-700	1590-2650	10734	4869	DN250	DN250
MAS 74-3	157 1/8	3990	84 9/16	2150	77 7/8	1980	55 3/4	1420	96 1/16	2440	420-700	1590-2650	12992	5893	DN250	DN250
MAS 75-1	109 1/16	2770	84 9/16	2150	89 7/8	2280	68 1/32	1730	107 7/8	2740	525-875	1987-3312	9149	4150	DN250	DN250
MAS 75-2	93 5/8	3380	84 9/16	2150	89 7/8	2280	68 1/32	1730	107 7/8	2740	525-875	1987-3312	11680	5298	DN250	DN250
MAS 75-3	157 1/8	3990	84 9/16	2150	89 7/8	2280	68 1/32	1730	107 7/8	2740	525-875	1987-3312	14213	6447	DN250	DN250
MAS 76-1	109 1/16	2770	84 9/16	2150	102 3/4	2610	78 5/8	2000	124 1/16	3150	630-1050	2385-3974	10024	4547	DN300	DN300
MAS 76-2	93 5/8	3380	84 9/16	2150	102 3/4	2610	78 5/8	2000	124 1/16	3150	630-1050	2385-3974	12890	5847	DN300	DN300
MAS 76-3	157 1/8	3990	84 9/16	2150	102 3/4	2610	78 5/8	2000	124 1/16	3150	630-1050	2385-3974	15754	7146	DN300	DN300

MAS Series
Oil Water Separators for Offshore Applications

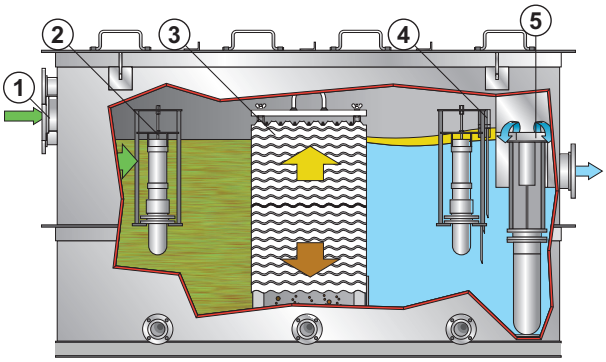

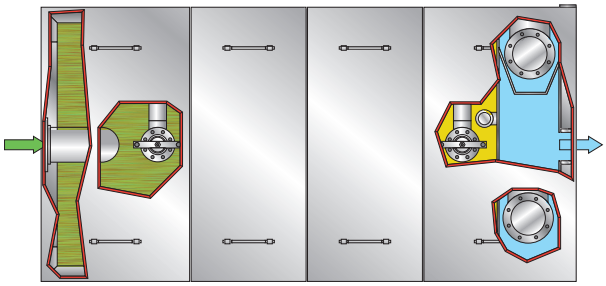

ITEM	DESCRIPTION
1	Inlet
2	Skimmer (optional)
3	Facet MPak®
4	Oil level probe (optional)
5	Automatic closure device
6	Outlet

Portable Fuel Filtration and Pumping Unit for Helicopters and Light Aircrafts

Facet designs, manufactures and distributes a wide range of Jet Fuel Dispensing Cabinets, Supply Carts, Refueling Containers Systems for the marine market fully adaptable to the specific needs of each customer and in compliance with the most stringent specifications of the regulatory agencies.

The Facet portable filtration and pumping set is an economical, light and compact packaged unit for the supply of clean, dry fuel to helicopters and light aircraft.

The standard unit is fitted with a Facet VF 21/22-SB filter separator, differential pressure gauge and 12 volt or 24 volt electric pump for a maximum flow of 44 lpm (11.62 gpm). The unit is complete with intake and delivery hoses and comes with a lightweight antidrip nozzle.

The unit can be run from a 12 volt vehicle battery or from the helicopter's own power supply. A filter monitor can be fitted as an alternative to the standard filter water separator. Quality fuel accessories are available as options to improve and expand your transfer fuel systems for greater convenience and higher accuracies.

Standard Design

- Facet Model VF 21/22-SB filter separator or monitor
- Differential pressure gauge piston type
- Ø19 mm (¾") adjustable plastic suction pipe assembly
- 13' (4 meter) fuel intake hose, with nipples for coupling to the pump and fuel intake filter
- 13' (4 meter) discharge hose, with nipples for coupling to the pump and antidripping nozzle
- High-flow automatic nozzle
- Electric pump, flow rate 44 lpm (11.62 gpm)
- On/Off switch
- Electric supply cable with nippers for connection to the power supply
- Ground connection cable
- Tubular type chassis for light weight and portability
- Approximate weight: 38 kgs (84 lbs)
- Chassis Dimensions: 450x500x510 mm (17¾"x19⅔"x20")

Options

- Volumetric meter
- 230 VAC pump
- Hose reel

V Series
Lube Oil Conditioners

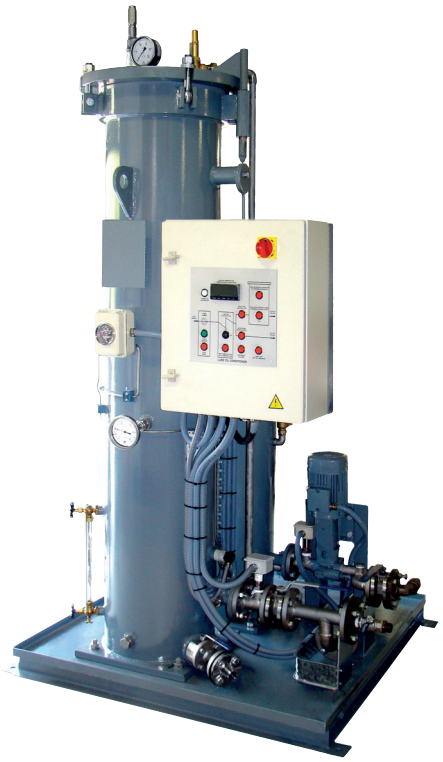

Design and Construction

Facet Lube Oil Conditioners are built in carbon steel, epoxy painted and designed according to ASME VIII-I.

This equipment is specially designed to remove solids such as dirt, rust, sand and metallic particles wear, as well as lube oily water.

The equipment is made up by a separator filter, a pumping unit and heating unit (optional), all assembled in a skid.

The microfilter separator includes coalescer and separator cartridges with a double objective of retaining the finest particles and removal of water, to ensure a long life and high effectiveness thanks to their specific properties.

Characteristics

The equipment has the following elements:

- Microfilter separator
- Pumping unit
- Heating (optional)
- Differential pressure gauge
- Level water gauge
- Automatic air eliminator
- Level prove to detect the presence of water
- Control panel

The control panel has the following visual alarms: high level of water in the microfilter separator, high differential pressure, general failure, high temperature alarm (optional)

Results

- Removes, in continuous operation, solids and free water up to concentrations below 20 ppm
- Automatic operation, controlled by a PLC
- No flow inlet adjustment is required
- Its design ensures a safe service and free of leaks or discharges
- Their features make this equipment to have a low maintenance and to be easy to operate
- Each equipment is tested before its shipment to ensure optimum start-up and highest service rates

V Series
Lube Oil Conditioners

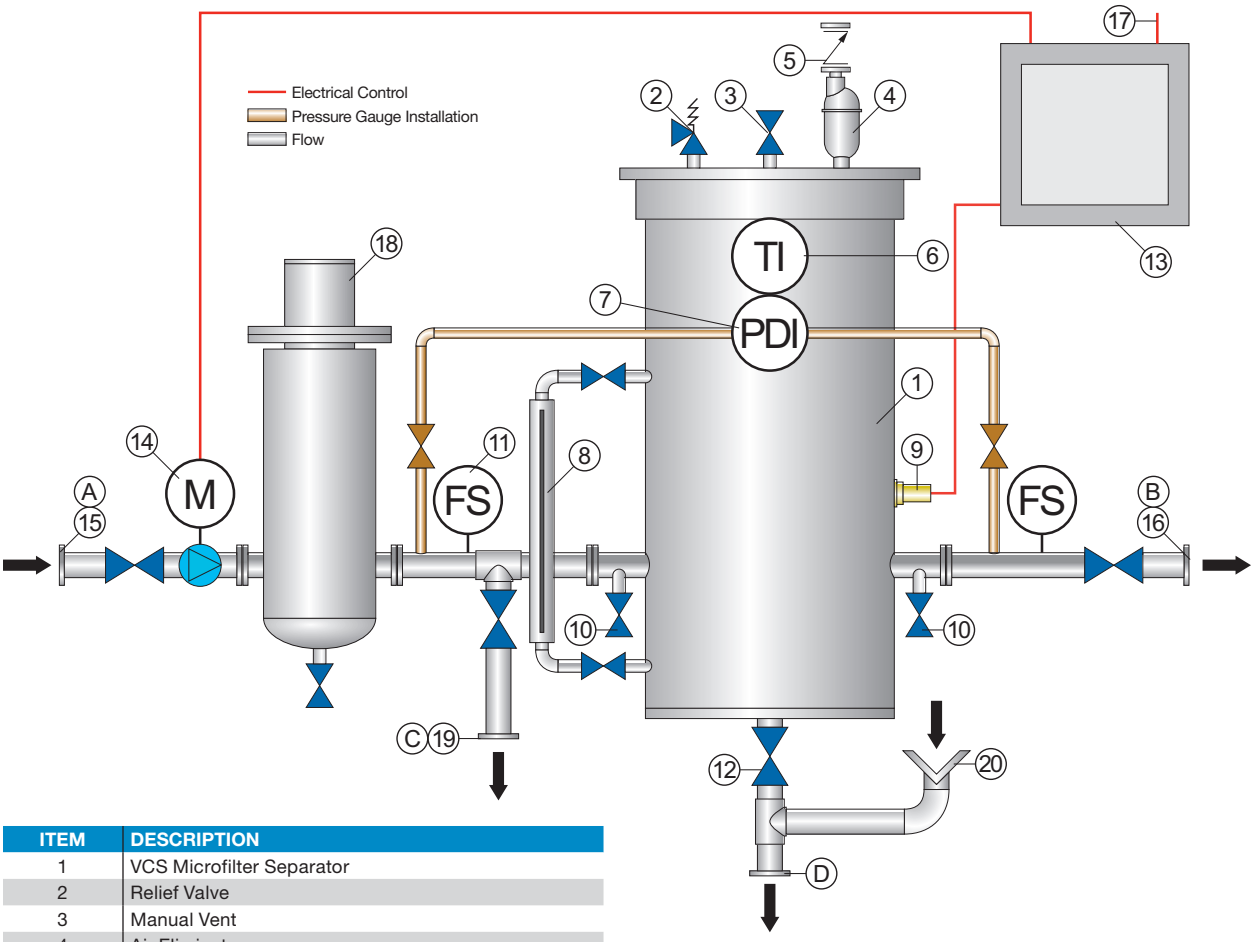

ITEM	DESCRIPTION
1	VCS Microfilter Separator
2	Relief Valve
3	Manual Vent
4	Air Eliminator
5	Check Valve
6	Temperature Indicator
7	Differential Ppressure Gauge
8	Level Indicator
9	Level Probe
10	Inlet/Outlet Sample Probe
11	Flow Switch
12	Manual Drain Valve
13	Control Panel
14	Motor Pump
15	Inlet
16	Outlet
17	Electrical Line (customer supply)
18	Heater (optional)
19	Return to Tank Line
20	Drain

MODEL	V40	V70	V110
Coalescer cartridge	CA56-3	CA43-3	CA43-3
No. of cartridges	2	3	4
Recommended spares	2	3	4
Separator cartridges	ST640FD	ST636FD	ST636FD
No. of cartridges	1	2	3
Recommended spares	1	2	3

MODEL	DIMENSIONS						FLOW RATE		CONNECTIONS			
	Length		Width		Height							
	in	mm	in	mm	in	mm	gpm	lpm	A (Inlet)	B (Outlet)	C (Return to tank)	D (Manual drain)
V40	53 1/32	1350	37 1/4	950	94 1/16	2390	10.5	40	DN40	DN40	DN40	DN25
V70	53 1/32	1350	37 1/4	950	80 3/4	2055	18.5	70	DN40	DN40	DN40	DN25
V110	61 1/32	1550	43 1/16	1100	80 3/4	2055	29	110	DN50	DN50	DN50	DN25

JP-5 Fuel Treatment Systems

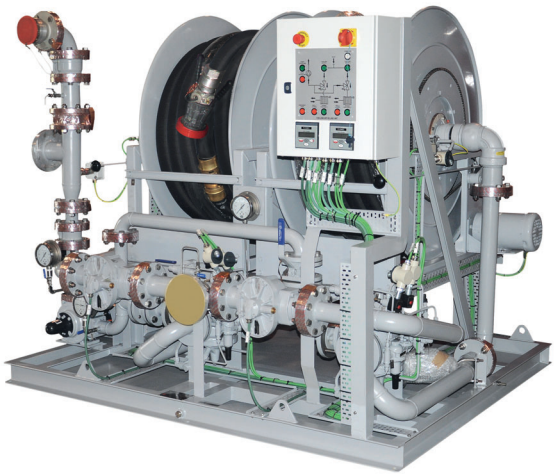

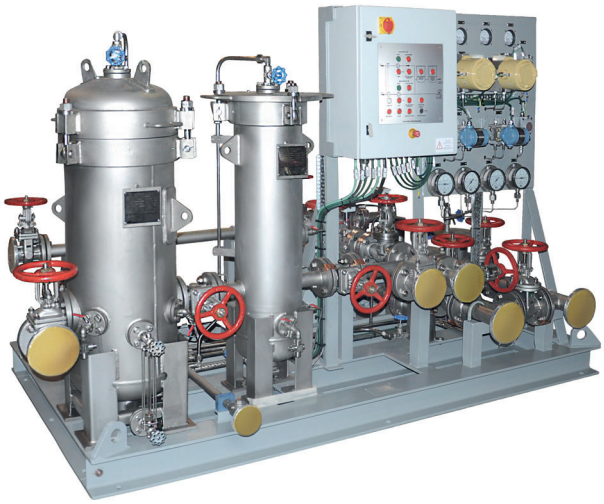

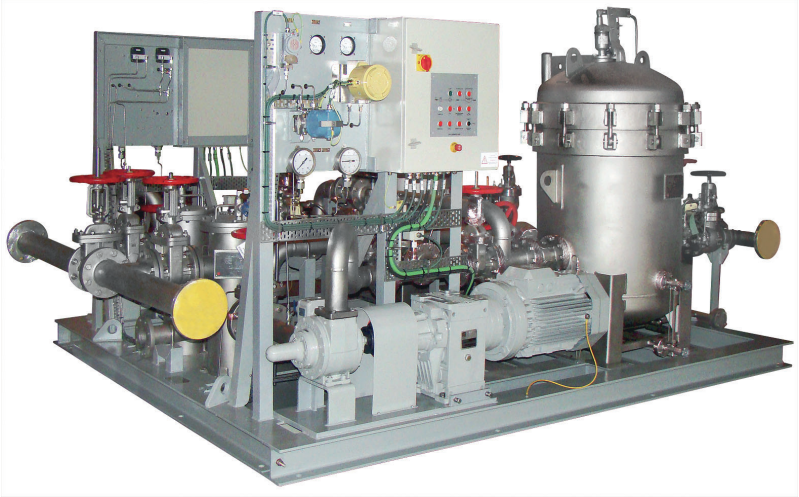

Facet designs, manufactures and distributes a wide range of JP-5 Fuel Treatment Systems for the marine market, tailored to the specific needs of customers and in compliance with the most stringent specifications of regulatory agencies.

As custom-made equipment, they can be configured as transfer units, service units, supply units, defueling units or combine various functions in one single unit.

These many adaptation capabilities allow to develop the right configuration according to the available space on board. Therefore, it is possible to install Facet JP-5 Fuel Treatment Systems in all kind of vessels, from small patrol boats to frigates, submarines or the largest aircraft carriers in the most important armies in the world.

Turbo-Generator Fuel/Oil Modules

The Turbo-Generator Fuel/Oil Modules embrace the sum of Facet's know-how in microfiltration and separation, together with our experience in handling of fueling systems, providing fully automated pumping, filtration and conditioning of the fuel that is supplied to the turbo-generator.

Facet designs, manufactures and distributes a wide range of Turbo-Generator Fuel/Oil Modules for the marine market, tailored to the specific needs of customers and in compliance with the most stringent specifications of regulatory agencies.

The many adaptation capabilities allow to develop the right configuration according to the available space on board. Therefore, it is possible to install Facet Turbo-Generator Fuel/Oil Modules in all kind of vessels, from small patrol boats to frigates, submarines or the largest aircraft carriers in the most important armies in the world.

STP Series
Sewage Treatment Plants

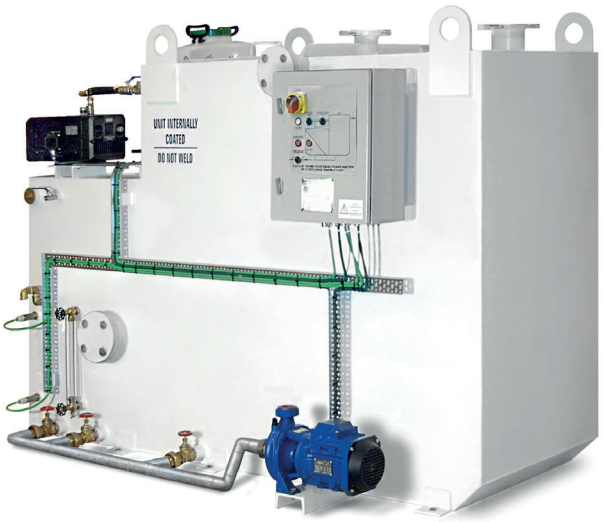

Facet Sewage Treatment Plants STP Series for marine applications are designed for the treatment of black (from WC, urinals, and hospital) and grey (sinks, showers, laundry and galley) water generated on board.

The treatment consists of the purification and subsequent disinfection of the water to achieve an effluent whose quality meets the IMO requirements.

The purification mechanism is based on a biological process of active sludge with extended aeration: the microorganisms in the biomass purify the water, so that no additional chemical treatment throughout the process is necessary.

The plants are built in a single steel module to ease transportation and on board installation. The module is divided into three chambers (aeration, settling and discharge/disinfection), each of them with their respective inspection accesses.

In the aeration chamber are housed the air diffusers which provide the necessary oxygenation for the microorganisms and generate the agitation that homogenizes the content of the reactor.
The settling chamber, pressurized to improve the process of deposition of solids, contains the biological filter and the sludge recirculation connections and greases toward the aeration chamber.

Standard Features

- Meet IMO Resolutions MEPC-2(VI) and MEPC-159(55)
- Certified by the Maritime and Coastguard Agency and the CE
- No sludge generation
- No odour generation
- Fully automatic operation driven by PLC
- Inside and outside Epoxy protective coating
- Aeration system compounded by a blower, an air supply pipe, bubble diffusers, a filter and an air relief valve
- Automatic sludge recirculation system
- Access and inspection registers in every chamber
- Electrical control panel, with IP-55 protection, including operation synoptic panel

Options

- Stand-by blower
- Stand-by discharge pump
- Chlorine solution dosing pump
- Grease trap
- Integrated vacuum system

STP Series
Sewage Treatment Plants

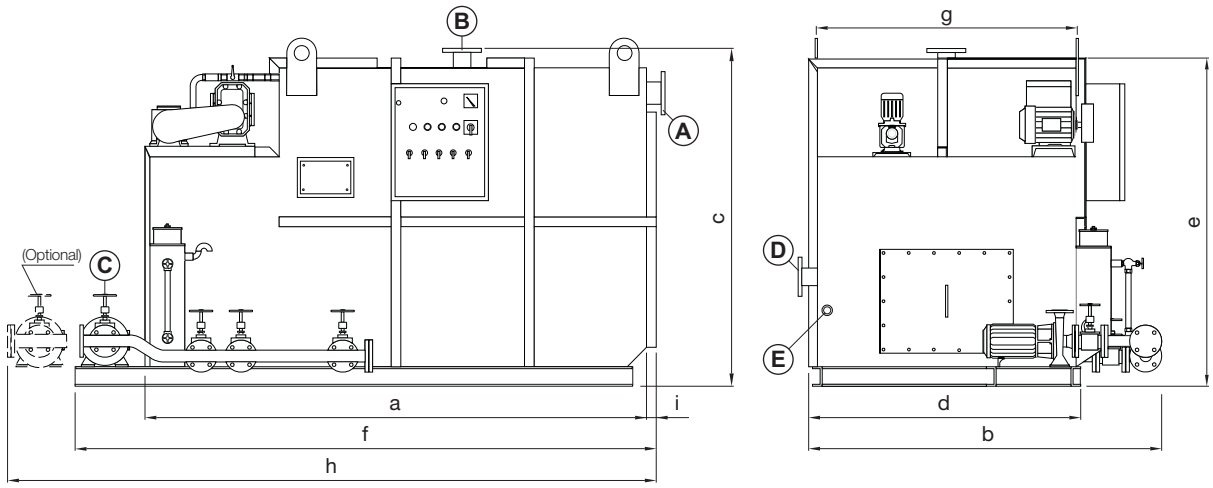

DIMENSIONS

MODEL	a		b		c		d		e		f		g		h		i	
	in	mm	in	mm	in	mm	in	mm	in	mm	in	mm	in	mm	in	mm	in	mm
STP-0.5	67	1700	39⅜	1000	52⅛	1324	24	609	52	1320	79¾	2024	22	558	91½	2324	4	100
STP-1	83⅝	2124	39⅜	1000	58⅛	1476	24	609	58	1473	101	2565	22	558	112¾	2863	4	100
STP-1.5	93	2362	49⅜	1255	66	1676	34	863	65	1625	101¾	2584	32	812	117½	2984	4	100
STP-2	91	2311	65⅝	1667	66	1676	50	1270	65	1625	103¾	2635	48	1219	115½	2934	4	100
STP-3	113¾	2889	65⅝	1667	66	1676	50	1270	65	1625	127¾	3244	48	1219	139½	3544	4	100
STP-4	120	3048	70⅝	1794	76	1930	53½	1359	77½	1969	139¾	3549	51½	1310	151½	3848	4	100
STP-6	138	3505	81	2057	81½	2070	66	1676	77½	1969	159¼	4044	64	1625	169½	4305	4	100
STP-8	135⅝	3445	91	2311	93½	2375	74	1879	109¼	2774	155¼	3944	72	1828	167	4242	4	100
STP-10	156	3962	91	2311	93½	2375	74	1879	109¼	2774	175¾	4464	72	1828	187½	4762	4	100
STP-12	170½	4333	103⅛	2619	93½	2375	86	2184	109¼	2774	176½	4833	84	2134	202	5131	4	100
STP-14	192¼	4883	103⅛	2619	93½	2375	86	2184	109¼	2774	212	5385	84	2134	223¾	5683	4	100
STP-16	192½	4990	103⅛	2619	105⅜	2676	86	2184	101½	2578	216¼	5492	84	2134	228	5791	4	100
STP-18	192½	4990	115	2921	105⅜	2676	98	2489	101½	2578	216¼	5492	96	2438	228	5791	4	100
STP-20	214¼	5442	115	2921	105⅜	2676	98	2489	101½	2578	234	5943	96	2438	245¾	6242	4	100
STP-22	207¾	5277	115	2921	117⅜	2983	98	2489	113½	2883	227½	5778	96	2438	239¼	6077	4	100
STP-24	198¼	5035	127⅛	3229	117⅜	2983	110	2794	113½	2883	218	5537	108	2743	229¾	5837	4	100
STP-30	222¼	5645	139 1/16	3532	117⅜	2983	122	3098	113½	2883	242	6146	120	3048	253¾	6446	4	100

CONNECTIONS

MODEL	A (Inlet)	B (Air Vent)	C (Discharge)	D (Grey Water Inlet)	E (Chlorine Inlet)
STP-0.5	DN100	DN80	1 ½" RH	DN80	½" RH
STP-1	DN100	DN80	1 ½" RH	DN80	½" RH
STP-1.5	DN100	DN80	1 ½" RH	DN80	½" RH
STP-2	DN100	DN80	1 ½" RH	DN80	½" RH
STP-3	DN100	DN80	1 ½" RH	DN80	½" RH
STP-4	DN100	DN100	DN32	DN80	½" RH
STP-6	DN100	DN100	DN32	DN80	½" RH
STP-8	DN100	DN100	DN32	DN80	½" RH
STP-10	DN100	DN100	DN32	DN100	½" RH
STP-12	DN100	DN100	DN32	DN100	½" RH
STP-14	DN100	DN100	DN32	DN100	½" RH
STP-16	DN100	DN100	DN32	DN100	½" RH
STP-18	DN100	DN100	DN32	DN100	½" RH
STP-20	DN100	DN100	DN32	DN100	½" RH
STP-22	DN100	DN150	DN32	DN100	½" RH
STP-24	DN100	DN150	DN32	DN100	½" RH
STP-30	DN100	DN150	DN32	DN100	½" RH

STP Series
Sewage Treatment Plants

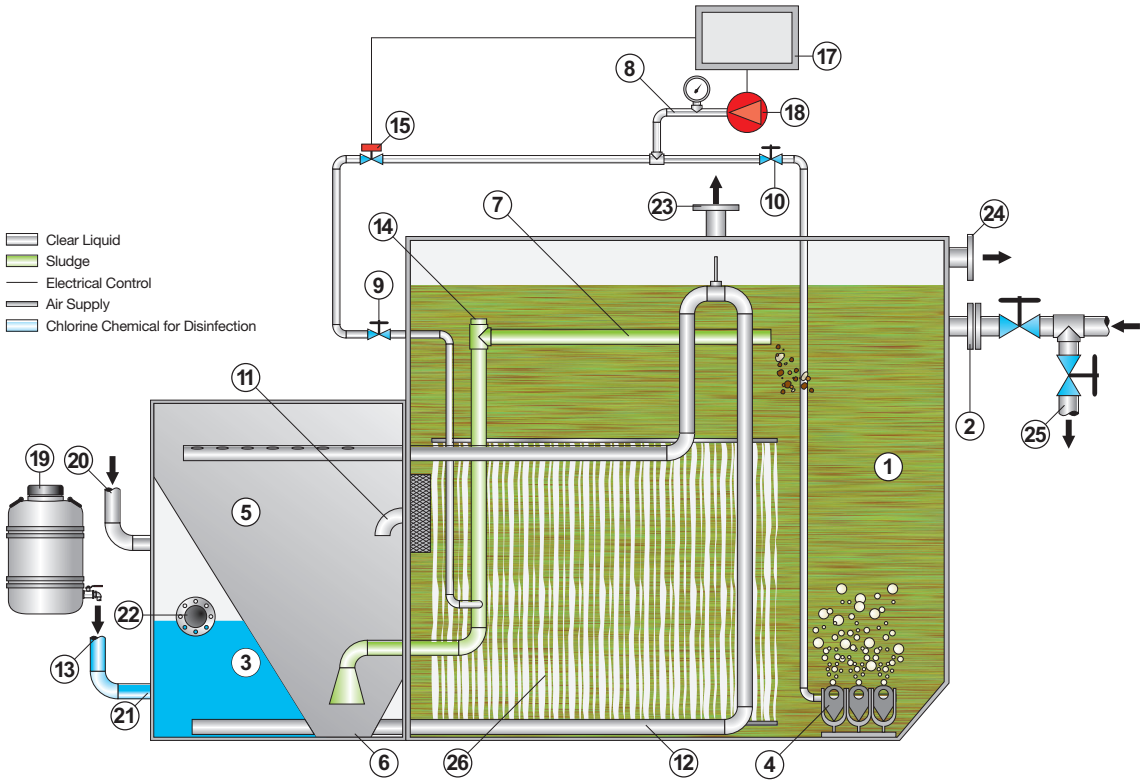

ITEM	DESCRIPTION
1	Aeration chamber
2	Sewage inlet
3	Chlorination chamber
4	Air diffusers
5	Clarification chamber
6	Clarification chamber bottom
7	Sludge return line
8	Sewage treatment unit air supply
9	Sludge return line air supply needle valve
10	Diffuser air supply valve
11	Clarifier inlet baffle pipe
12	Crossover manifold (from clarifier to chlorine chamber)
13	Chlorine chemical injection
14	Sludge return cleanout
15	Sludge return air supply solenoid valve
16	Anti-syphon vent
17	Control panel
18	Blower
19	Chlorine tank
20	Grey water inlet
21	Chlorine chemical injection
22	Treated liquid discharge from sewage treatment unit
23	Air vent atmosphere
24	To bilge
25	Unit overboard bypass
26	Bioreactor

VTP Series
Sewage Treatment Plants with Built-in Vacuum System

Facet Sewage Treatment Plants STP Series for marine applications are designed for the treatment of black (from WC, urinals, and hospital) and grey (sinks, showers, laundry and galley) water generated on board.

The treatment consists of the purification and subsequent disinfection of the water to achieve an effluent whose quality meets the IMO requirements.

The purification mechanism is based on a biological process of active sludge with extended aeration: the microorganisms in the biomass purify the water, so that no additional chemical treatment throughout the process is necessary.

The plants are built in a single steel module to ease transportation and on board installation. The module is divided into three chambers (aeration, settling and discharge/disinfection), each of them with their respective inspection accesses.

In the aeration chamber are housed the air diffusers which provide the necessary oxygenation for the microorganisms and generate the agitation that homogenizes the content of the reactor.
The settling chamber, pressurized to improve the process of deposition of solids, contains the biological filter and the sludge recirculation connections and greases toward the aeration chamber.

Built-in vacuum system takes charge of transportation of black waters along the vacuum system to the treatment plant. The vacuum in the circuit is achieved automatically with the ejector and circulating pump.

Standard Features

- Meet IMO Resolutions MEPC-2(VI) and MEPC-159(55)
- Certified by the Maritime and Coastguard Agency and the CE
- No sludge generation
- No odour generation
- Fully automatic operation driven by PLC
- Inside and outside Epoxy protective coating
- Aeration system compounded by blower, air supply pipe, bubble diffusers, filter and air relief valve
- Automatic sludge recirculation system
- Access and inspection registers in every chamber
- Electrical control panel, with IP-55 protection, including operation synoptic panel
- Vacuum ejectors
- Circulating pumps

Options

- Stand-by blower
- Stand-by discharge pump
- Chlorine solution dosing pump
- Grease trap

VTP Series
Sewage Treatment Plants with Built-in Vacuum System

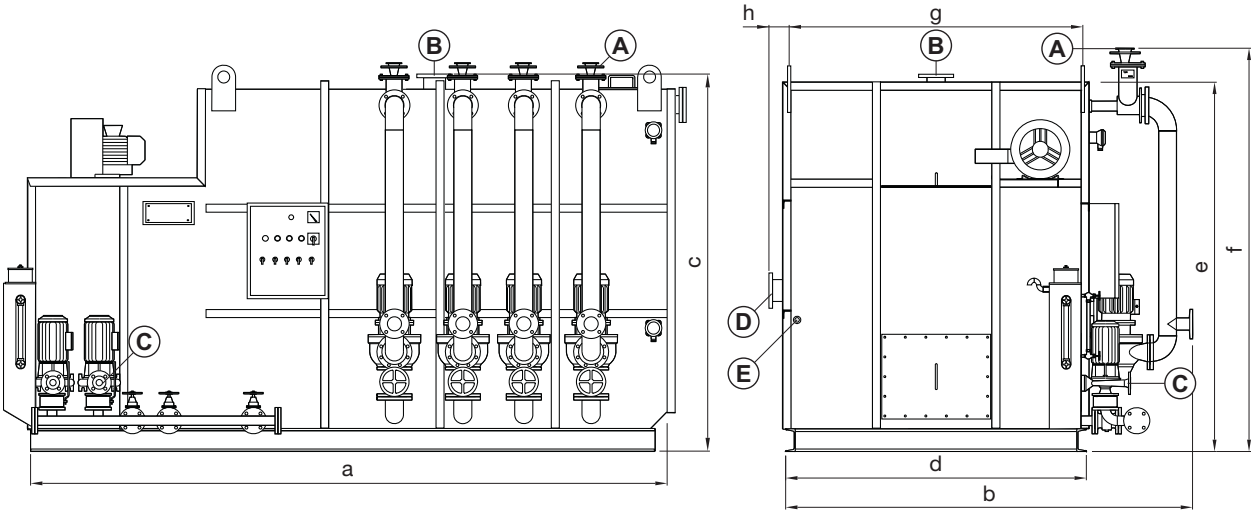

DIMENSIONS

MODEL	a		b		c		d		e		f		g		i	
	in	mm	in	mm	in	mm	in	mm	in	mm	in	mm	in	mm	in	mm
VTP-0.5	60	1524	41⅛	1044	56	1422	24	609	52	1320	61	1549	22	558	4	100
VTP-1	81⅛	2060	41⅛	1044	61⅞	1571	24	609	58	1473	61⅜	1559	22	558	4	100
VTP-1.5	86	2184	51	1295	67⅞	1724	34	863	65	1625	65⅝	1667	32	812	4	100
VTP-2	84¼	2140	67⅞	1705	67⅞	1724	50	1270	65	1625	65⅝	1667	48	1219	4	100
VTP-3	108⅛	2744	67⅞	1705	67⅞	1724	50	1270	65	1625	65⅝	1667	48	1219	4	100
VTP-4	120	3048	70⅝	1794	76	1930	53½	1359	77½	1969	83⅛	2111	51½	1310	4	100
VTP-6	138$^{1}/_{32}$	3506	81	2057	81⅜	2069	66	1676	77½	1969	83⅛	2111	64	1625	4	100
VTP-8	135⅝	3445	91	2311	93½	2375	74	1879	109¼	2274	95	2413	72	1828	4	100
VTP-10	156	3962	91	2311	93½	2375	74	1879	109¼	2274	95	2413	72	1828	4	100
VTP-12	170⅝	4334	103⅛	2619	93½	2375	86	2184	109¼	2274	95	2413	84	2134	4	100
VTP-14	192¼	4883	103⅛	2619	93½	2375	86	2184	109¼	2274	95	2413	84	2134	4	100
VTP-16	196½	4991	103⅛	2619	105⅜	2676	86	2184	101½	2578	107⅛	2721	84	2134	4	100
VTP-18	196½	4991	115	2921	105⅜	2676	98	2489	101½	2578	107⅛	2721	96	2438	4	100
VTP-20	214¼	5442	115	2921	105⅜	2676	98	2489	101½	2578	107⅛	2721	96	2438	4	100
VTP-22	207¾	5277	115	2921	117⅜	2981	98	2489	113½	2883	119	3022	96	2438	4	100
VTP-24	198¼	5035	127⅛	3229	117⅜	2981	110	2794	113½	2883	119	3022	108	2743	4	100
VTP-30	222¼	5645	139¼	3537	117⅜	2981	122	3098	113½	2883	119	3022	120	3048	4	100

CONNECTIONS

MODEL	A (Inlet)	B (Air Vent)	C (Discharge)	D (Grey Water Inlet)	E (Chlorine Inlet)
VTP-0.5	DN100	DN80	1 ½" RH	DN80	½" RH
VTP-1	DN100	DN80	1 ½" RH	DN80	½" RH
VTP-1.5	DN100	DN80	1 ½" RH	DN80	½" RH
VTP-2	DN100	DN100	1 ½" RH	DN80	½" RH
VTP-3	DN100	DN100	1 ½" RH	DN80	½" RH
VTP-4	DN65	DN100	DN32	DN80	½" RH
VTP-6	DN65	DN100	DN32	DN80	½" RH
VTP-8	DN65	DN100	DN32	DN80	½" RH
VTP-10	DN65	DN100	DN32	DN80	½" RH
VTP-12	DN65	DN150	DN32	DN80	½" RH
VTP-14	DN65	DN150	DN32	DN80	½" RH
VTP-16	DN65	DN150	DN32	DN80	½" RH
VTP-18	DN65	DN150	DN32	DN80	½" RH
VTP-20	DN65	DN150	DN32	DN80	½" RH
VTP-22	DN65	DN150	DN32	DN80	½" RH
VTP-24	DN65	DN150	DN32	DN80	½" RH
VTP-30	DN65	DN200	DN32	DN80	½" RH

VTP Series
Sewage Treatment Plants with Built-in Vacuum System

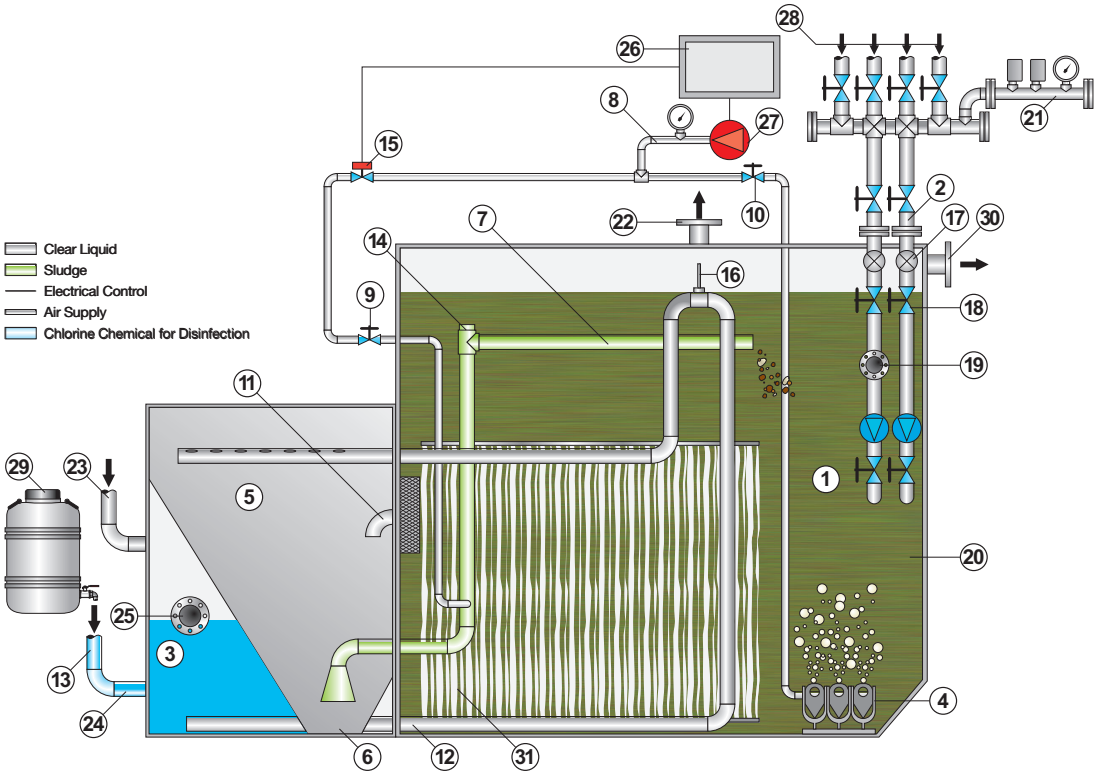

ITEM	DESCRIPTION
1	Aeration chamber
2	Sewage inlet
3	Chlorine contact discharge chamber
4	Stainless steel non-clog air diffusers
5	Clarification chamber
6	Bottom of clarifier hopper
7	Sludge return line
8	Sewage treatment unit air supply
9	Sludge return line air supply needle valve
10	Diffuser air supply valve
11	Clarifier inlet baffle pipe
12	Crossover manifold (from clarifier to chlorine chamber)
13	Chlorine chemical injection
14	Sludge return cleanout
15	Sludge return air supply solenoid valve
16	Anti-syphon vent
17	Vacuum ejector
18	Vacuum manifold valves
19	Discharge valves
20	Circulation ejector pump
21	Vaccum control manifold
22	Air vent to atmosphere
23	Grey water inlet
24	Chlorine chemical injection
25	Treated liquid discharge from sewage treatment unit
26	Control panel
27	Blower
28	Sewage inlet pipe
29	Chlorine tank
30	To bilge
31	Bioreactor

Facet
Filtration Group®

www.processtechnologies.filtrationgroup.com

facet@filtrationgroup.com

© 2020 Facet - Filtration Group
All rights reserved. No part of this publication may be reproduced, distributed, or transmitted in any form or by any means, including photocopying, recording, or other electronic or mechanical methods, without the prior written permission of the publisher, except in the case of brief quotations embodied in critical reviews and certain other noncommercial uses permitted by copyright law.

08JAN2020